This drawing, specifications, and concepts contained here in are the sole property of Dart Aerospace, and may not be reproduced or used in any fashion without the prior written permission of Dart Aerospace Eugene, OR.

REVISIONS

| REV | ECR | DESCRIPTION | DATE | INITIAL | APPROVED |
|---|---|---|---|---|---|
| 1 | | DELETED ONE -79 AND ADDED ONE -80 IN -3 & -5 WELDMENT, CHANGED TABLE COLUMN FROM DIMC TO NOTE, CHANGED -9 FROM Ø.395 TO THRU TUBE & -11 FROM 2X Ø.375 TO THRU WALL, ADDED -17 MISSING 4X .59 DIM. & ADDED DRILL AT ASSEMBLY TO 4X Ø.374 HOLE, ADDED -21 DRILL AT FINAL ASSEMBLY TO Ø.395 HOLE, ADDED SEE NOTE LEADER, ADDED MISSING .600 DIM., ADDED -23 SEE NOTE LEADER, ADDED MISSING 2X Ø.266 DIM. PER S.E. CH'D -43 MATERIAL FROM 1-1/4 X 2 X 1/8 WALL PER R.W. ADDED -55 THRU BOTH SIDES TO 3X Ø.625 HOLE PER S.E. ADDED -65 2X .07 X 45° WELD CHAMFERS PER G.E. ADDED -67 NOTE TO LOCTITE AFTER ASSEMBLY AND (11.38) DIM. PER R.W. CH'D -71, -73, -75, & -77 DIMENSIONS FOR BETTER FIT, ADDED -80 TO MAKE COLLAPSING PLATFORM EASIER PER S.E. | 2/21/2012 | RJC | SE |
| 2 | | **-3** DELETED 4X -83 RIVNUTS, ADDED 2X -84 STIFFENER BLOCKS, ADDED 4X M6X1.0 - 6H ↧1.0. **-5** DELETED 4X -83 RIVNUTS, ADDED 2X -84 STIFFENER BLOCK, ADDED 4X M6X1.0 - 6H ↧1.0. **-17** DELETED 4X Ø.374 HOLES, ADDED 2X Ø.50 THRU ALL FOR -84 PLUG WELD. **-84** ADDED SHEET 33. **-89** CH'D WAS M6 X 12 MCMASTER-CARR #92010A424 IS M6X1.0 X 25mm MCMASTER-CARR #91801A320. ADDED ARCHITECTURAL TUBE SPEC. TO BOM FOR PARTS **-7, -9, -11, -13, -15, -17, -37, -39, -43, -47, -49, -51, -53, -55**. | 8/26/2013 | CFS | DW |
| 3 | | **-1** CH'D 14 RIVETS TO -117 8-32 SCREWS. **-3 -5** DELETED -84 STIFFENERS, ADDED .19X45° CHAMFER. CH'D CORNER WELDS TO GRIND FLUSH. -79 & -80 CH'D WHERE ANGLE IS MEASURED WAS 54° IS 36°, ADDED 7 8-32 HOLES. **-15** CH'D TO SOLID FROM TUBE, AND HOLES TO HELICOIL FROM RIVNUT. **-17** CH'D TO SOLID, REMOVED HOLES. **-19** ADDED DIM 8X R.25. CH'D 6 HOLES FROM Ø.16 TO Ø.18 ↘ Ø.40 X 82°. **-21** CH'D DIM WAS 2X R.38 IS 4X R.38. CH'D 2X Ø.266 HOLES TO 2X Ø.266 X .15 SLOT. **-23** CH'D DIM WAS 2X R.38 IS 4X R.38. **-31 -33** ADDED ALL-AROUND TO WELD CALLOUT. **-43** ADDED REF. DIMS (3.54) AND (90°). ADDED HIDDEN LINE. **-61** ADDED NOTE "CLEAN-UP INSIDE RADIUS". **-65** ADDED DIM 1.25, DELETED DIM 1.11. **-71, -73, -75, & -77** ADDED NOTES AND VIEW FOR ORIENTATION OF GLUE SEAMS. **-80** ADDED 2X R.17 DIM TO SLOT & 2X R.19. **-81 WAS 3/8-16 RIVET NUT IS 3/8-16 HELICOIL.** | 1/30/2014 | JAG | RW |
| 4 | | CH'D TITLEBLOCK WAS RED BARN IS DART. -1 ADDED NOTES 2 & 3. **-3** & **-5** DELETED HOLES FOR MOUNTING -19. **-19** DELETED HOLES. **-21** CH'D CALLOUT WAS Ø.395 DRILL AT FINAL ASSEMBLY IS Ø.395 DRILL AT -1 BASE ASSEMBLY. | 6/12/82014 | DPD | GE |
| 5 | 15-0106 | SHEETS 4-8, 13-21, 29, 30 CH'D DWG TO SHEET METAL TOLERANCE. **-1** ADDED -90, ADDED NOTES 4 AND 5 . **-3** MOVED HOLE FOR -97 TO BE DRILLED AT -1, DELETED NOTE 3. **-5** MOVED HOLES FOR -85 TO BE DRILLED AT -1, DELETED NOTE 3. **-7**, **-9**, **-11** CH'D DIM WAS 25.474 IS 25.474 ±.03. DELETED HOLE TABLE, ALL HOLES ARE DRILLED AT -1 ASSEMBLY.**-13** CH'D DIM WAS 11.188 IS 11.188 ±.03. **-61** CH'D DIM WAS 3X .81 IS 3X .84. **-69** CH'D LENGTH DIM WAS 10.31 IS 9.75. | 5/15/2015 | RJC | JAG |

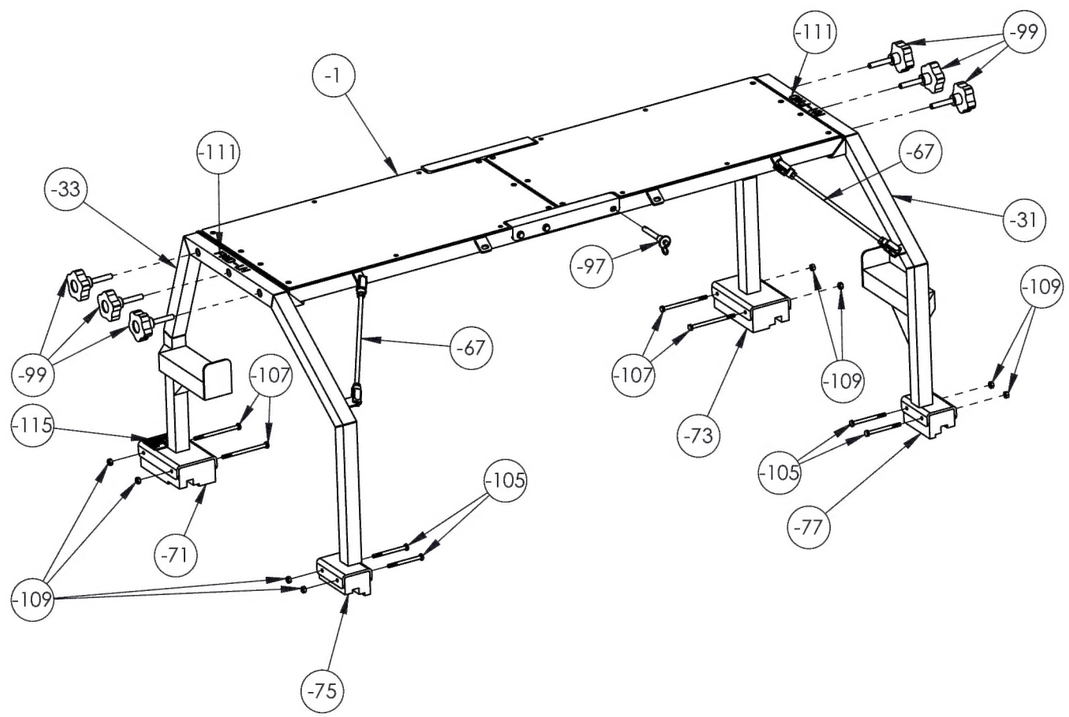


NOTE:
REF. AGUSTA T/N: 3G1205G00831

DART AEROSPACE

TITLE: UPPER DECK PLATFORM

DWG NO. RBW1205G00831-3G — REV 5

MAT'L

UNLESS OTHERWISE SPECIFIED DIMENSIONS ARE IN INCHES
.XXX ± .005 FRACTIONS ± 1/8
.XX ± .01 ANGLES ±.5°
.X ± .1

1. BREAK ALL SHARP EDGES .015 x 45° OR .015R
2. DIMENSIONAL LIMITS APPLY AFTER PLATING

DRAWN BY: GILBERT
APPROVED: D Weil
HEAT TREAT
FINISH
SPEC
USED ON MODEL: AW139

SCALE 1:12 | DATE 3/17/2011 | SHEET 1 OF 32

This drawing, specifications, and concepts contained here in are the sole property of Dart Aerospace, and may not be reproduced or used in any fashion without the prior written permission of Dart Aerospace Eugene, OR.

REVISIONS

| REV | ECR | DESCRIPTION | DATE | INITIAL | APPROVED |
|---|---|---|---|---|---|

| ASSY QTY | ASSY QTY | ASSY QTY | ASSY QTY | ASSY QTY | ASSY QTY | ASSY QTY | ASSY QTY | B/O | Part # | UNIT QTY | Description | Material | B/O INFORMATION OR SPECIFICATIONS | PG. |
|---|---|---|---|---|---|---|---|---|---|---|---|---|---|---|
| | | | | | | | X | | -1 | 1 | BASE ASSEMBLY | | | 3 |
| | | | | | | X | 1 | | -3 | | BASE1 WELDMENT | | | 4 |
| | | | | | X | | 1 | | -5 | | BASE2 WELDMENT | | | 5 |
| | | | | | | 1 | | | -7 | | B-1 | 6061 ARCH. TUBE | | 6 |
| | | | | | | 1 | | | -9 | | B-2 | 6061 ARCH. TUBE | | 6 |
| | | | | | 2 | | | | -11 | | B-6 | 6061 ARCH. TUBE | | 6 |
| | | | | | 1 | 1 | | | -13 | | B-5 | 6061 ARCH. TUBE | | 6 |
| | | | | | 1 | 1 | | | -15 | | B-3 | 6061 | | 7 |
| | | | | | 1 | 1 | | | -17 | | B-4 | 6061 | | 7 |
| | | | | | | | 2 | | -19 | | TREAD PLATE | ALUMINUM | 1/8 X 13-1/2 X 25-1/2 COYOTE STEEL, POLISHED DIAMOND PATTERN, EMBOSSED HIGH TRACTION | 8 |
| | | | | | | | 1 | | -21 | | LOCKING BRACKET1 | S.S. | | 9 |
| | | | | | | | 1 | | -23 | | LOCKING BRACKET 2 | S.S. | | 10 |
| | | | | X | | | | | -31 | 1 | RH LEG WELDMENT | | | 11 |
| | | | X | | | | | | -33 | 1 | LH LEG WELDMENT | | | 12 |
| | | X | 1 | 1 | | | | | -35 | | STEP WELDMENT | | | 13 |
| | | 1 | | | | | | | -37 | | STEP BRACE1 | 6061 ARCH. TUBE | | 14 |
| | | 1 | | | | | | | -39 | | STEP | 6061 ARCH. TUBE | | 14 |
| | | 1 | | | | | | | -41 | | STEP END | 6061 | | 14 |
| | | | 1 | 1 | | | | | -43 | | STEP BRACE | 6061 ARCH. TUBE | | 15 |
| | X | | 1 | 1 | | | | | -45 | | LEG WELDMENT | | | 16 |
| | 1 | | | | | | | | -47 | | LG-1 | 6061 ARCH. TUBE | | 17 |
| | 1 | | | | | | | | -49 | | LG-2 | 6061 ARCH. TUBE | | 17 |
| | 1 | | | | | | | | -51 | | LG-4 | 6061 ARCH. TUBE | | 17 |
| | 1 | | | | | | | | -53 | | LG-3 | 6061 ARCH. TUBE | | 17 |
| | 1 | | | | | | | | -55 | | LG-5 | 6061 ARCH. TUBE | | 17 |
| | | | 1 | 1 | | | | | -57 | | SMALL FOOT BRACKET | 6061 | | 18 |
| | | | 1 | 1 | | | | | -59 | | LARGE FOOT BRACKET | 6061 | | 19 |
| | | | 1 | 1 | | | | | -61 | | BASE SHELF | 6061 ARCH. ANGLE | | 20 |
| | | | 2 | 2 | | | | | -63 | | BASE SHELF GUSSET | 6061 | | 21 |
| | 3 | | | | | | | | -65 | | INSERT PIPE | ALUMINUM | | 22 |
| X | | | | | | | | | -67 | 2 | ROD ASSEMBLY | | | 23 |
| 1 | | | | | | | | | -69 | | ROD | 303 S.S. | | 24 |
| | | | | | | | | | -71 | 1 | LH FORWARD PAD | RUBBER | | 25 |
| | | | | | | | | | -73 | 1 | RH FORWARD PAD | RUBBER | | 26 |
| | | | | | | | | | -75 | 1 | LH AFT PAD | RUBBER | | 27 |
| | | | | | | | | | -77 | 1 | RH AFT PAD | RUBBER | | 28 |
| | | | 1 | 1 | 1 | 1 | | | -79 | | EAR | 6061 | | 29 |
| | | | | | 1 | 1 | | | -80 | | SLOTTED EAR | 6061 | | 30 |
| | | | | | 3 | 3 | | B/O | -81 | | HELICOIL | S.S. | 3/8-16 UNF X 1 (MCMASTER-CARR #91732A747) | 4, 5 |
| | | | | | 4 | | | B/O | -85 | | RIVNUT | STEEL, PLATED | 1/4-28 (MCMASTER-CARR #98560A576) | 3 |
| | | | | | | | 2 | B/O | -87 | | HINGE | CHROME | (REID SUPPLY #ELH-303) | 3 |
| | | | | | | | 8 | B/O | -89 | | SCREW | S.S. | M6 X 1.0 X 25mm (MCMASTER-CARR #91801A320) | 3 |
| | | | | | | | 8 | B/O | -90 | | HELICAL INSERT | S.S. | M6 X 1.0 INT. THD X 15mm (MCMASTER-CARR #91732A786) | 3 |
| | | | | | | | 4 | B/O | -91 | | WASHER | S.S. | Ø1/4 WASHER (MCMASTER-CARR #90313A204) | 3 |
| | | | | | | | 4 | B/O | -93 | | SCREW | S.S. | 1/4-28 X 1 (MCMASTER-CARR #92240A108) | 3 |
| | | | | | | | 8 | B/O | -95 | | RIVET | S.S. | 5/32 RIVET (MCMASTER-CARR #97550A215) | 3 |
| | | | | | | | | B/O | -97 | 1 | BALL LOCK PIN | S.S. | Ø3/8 X 2 (MCMASTER-CARR #90985A313) | 1 |
| | | | | | | | | B/O | -99 | 6 | KNOB | PLASTIC, PLATED STEEL | 3/8-16 X 2.00 (REID #KHY-270) | 1 |
| 2 | | | | | | | | B/O | -101 | | ROD END | STEEL, PLATED | 5/16-24 X 1.26 (MCMASTER-CARR #2447K15) | 23 |
| 2 | | | | | | | | B/O | -103 | | HEX NUT, THIN | STEEL | 5/16-24 (MCMASTER-CARR #93839A810) | 23 |
| | | | | | | | | B/O | -105 | 4 | SCREW | S.S. | 1/4-20 X 3 (MCMASTER-CARR #92198A554) | 1 |
| | | | | | | | | B/O | -107 | 4 | SCREW | S.S. | 1/4-20 X 4 (MCMASTER-CARR #92198A558) | 1 |
| | | | | | | | | B/O | -109 | 8 | NUT | STEEL | 1/4-20 (MCMASTER-CARR #90499A029) | 1 |
| | | | | | | | | B/O | -111 | 1 | LETTERING | VINYL | BLACK, CUT VINYL SIGNS NOW | 31 |
| | | | | | | | | B/O | -113 | 1 | BAG | CANVAS | | 32 |
| | | | | | | | | B/O | -115 | 1 | DART PLACARD | ALUMINUM | #RB41011 | 1 |
| | | | | | | | 14 | B/O | -117 | | FLAT HEAD SCREW | S.S. | 8-32 UNF X 1/2 (MCMASTER-CARR #91500A194) | 3 |
| ASSY -67 | ASSY -45 | ASSY -35 | ASSY -33 | ASSY -31 | ASSY -5 | ASSY -3 | ASSY -1 | | | | | | | |

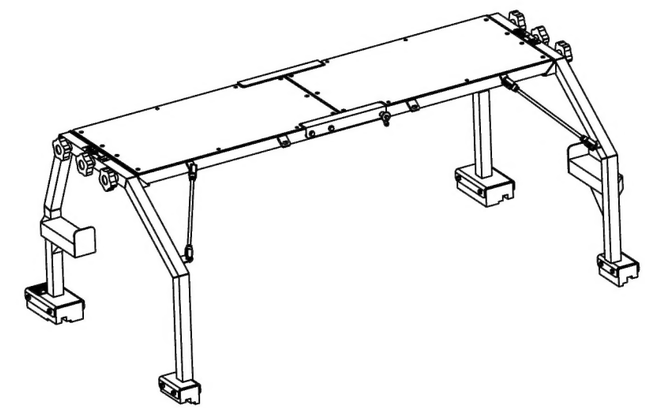

DART AEROSPACE

TITLE: UPPER DECK PLATFORM

DWG NO. RBW1205G00831-3G — REV 5

MAT'L

DRAWN BY: GILBERT

APPROVED: D Weil

HEAT TREAT

FINISH

SPEC

UNLESS OTHERWISE SPECIFIED DIMENSIONS ARE IN INCHES
.XXX ± .005 FRACTIONS ± 1/32
.XX ± .01 ANGLES ±.5°
.X ± .1

1. BREAK ALL SHARP EDGES .015 x 45° OR .015R
2. DIMENSIONAL LIMITS APPLY AFTER PLATING

USED ON MODEL: AW139

SCALE 1:12 — DATE 3/17/2011 — SHEET 2 OF 32

This drawing, specifications, and concepts contained here in are the sole property of Dart Aerospace, and may not be reproduced or used in any fashion without the prior written permission of Dart Aerospace Eugene, OR.

REVISIONS

| REV | ECR | DESCRIPTION | DATE | INITIAL | APPROVED |
|---|---|---|---|---|---|
| 2 | | **-89** CH'D WAS M6 X 12 MCMASTER-CARR #92010A424 IS M6 X 1mm X 25 MCMASTER-CARR #91801A320. | 8/26/2013 | CFS | DW |
| 3 | | **-1** CH'D 14 RIVETS TO -117 8-32 SCREWS. | 1/30/2014 | JAG | RW |
| 4 | | **-1** ADDED NOTES 2 & 3. | 5/14/2015 | DPD | GE |
| 5 | 15-0106 | **-1** ADDED -90, ADDED NOTES 4 AND 5 . | 5/15/2015 | RJC | JAG |

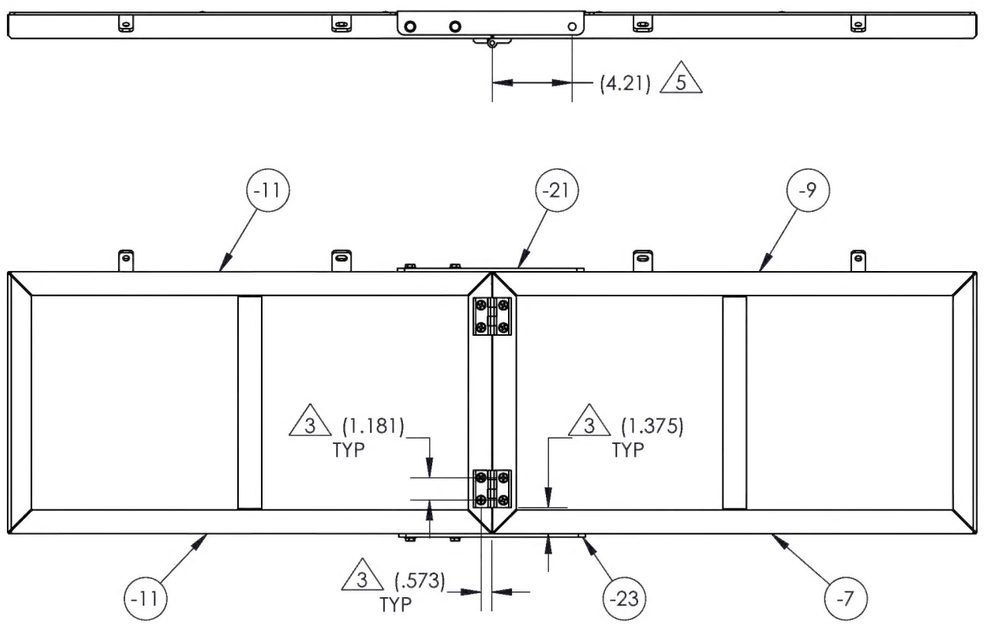


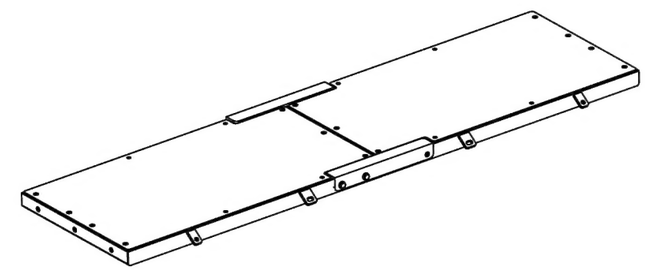

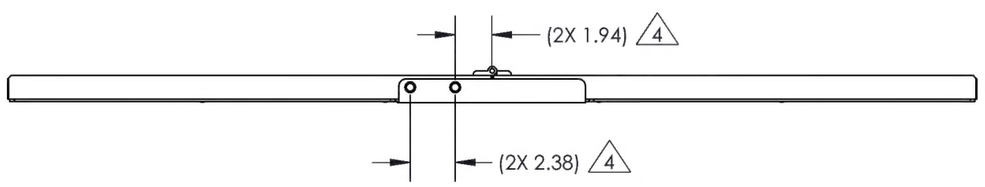


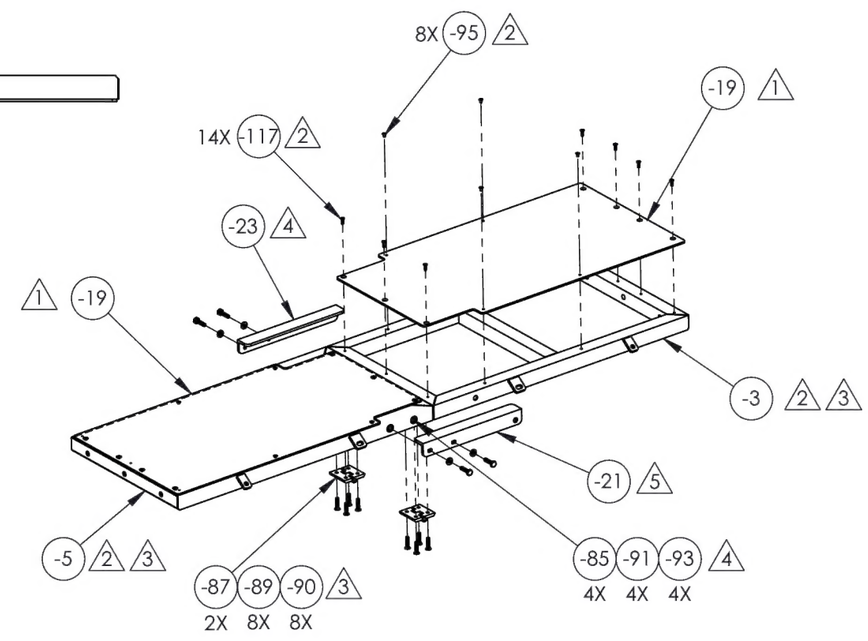


-1

BASE ASSEMBLY

NOTES:

1. POSITION TWO TREAD PLATES (-19) ON FRAMES. CENTER ON FRAMES AND USE AS A GUIDE.
2. DRILL ALL PILOT HOLES THRU ONE WALL OF TUBE FOR -95 & -117 TO ENSURE ALL HOLE POSITIONS ARE BELOW TREAD PLATE RISERS, THEN TAP AND COUNTERSINK HOLES AS REQUIRED FOR -95 & -117 TO MOUNT -19 TO -3 & -5.
3. POSITION -87 ONTO -3 & -5 CENTER, DRILL AND TAP HOLES FOR -90. USE CAUTION TO ENSURE HOLES DO NOT INTERFERE WITH -117 HOLES.
4. POSITION -21 & -23 AND DRILL PILOT HOLES FOR -85 THRU ONE WALL TO ENSURE PROPER ALIGNMENT.
5. POSITION -21 AND DRILL PILOT HOLE THRU TUBE FOR -97 TO ENSURE PROPER ALIGNMENT.

DART AEROSPACE

TITLE: UPPER DECK PLATFORM

DWG NO. RBW1205G00831-3G-1 REV 5

MAT'L

UNLESS OTHERWISE SPECIFIED DIMENSIONS ARE IN INCHES
.XXX ± .005 FRACTIONS ± 1/8
.XX ± .01 ANGLES ±.5°
.X ± .1

1. BREAK ALL SHARP EDGES .015 x 45° OR .015R
2. DIMENSIONAL LIMITS APPLY AFTER PLATING

DRAWN BY: GILBERT
APPROVED: D Weil
HEAT TREAT
FINISH
SPEC
USED ON MODEL: AW139

SCALE 1:12 DATE 3/17/2011 SHEET 3 OF 32

This drawing, specifications, and concepts contained here in are the sole property of Dart Aerospace, and may not be reproduced or used in any fashion without the prior written permission of Dart Aerospace Eugene, OR.

REVISIONS

| REV | ECR | DESCRIPTION | DATE | INITIAL | APPROVED |
|---|---|---|---|---|---|
| 1 | | DELETED ONE -79 AND ADDED ONE -80 IN -3 WELDMENT PER S.E. | 2/21/2012 | RJC | SE |
| 2 | | **-3** DELETED 4X -83 RIVNUTS ADDED 2X -84 STIFFENER BLOCKS, ADDED 4X M6X1.0 - 6H ↧ 1.0 | 8/26/2013 | CFS | DW |
| 3 | | **-3** DELETED -84 STIFFENERS, ADDED .19X45° CHAMFER. CH'D CORNER WELDS TO GRIND FLUSH. -79 & -80 CH'D WHERE ANGLE IS MEASURED WAS 54° IS 36°, ADDED 7 8-32 HOLES. | 1/30/2014 | JAG | RW |
| 4 | | **-3** DELETED HOLES FOR MOUNTING -19. | 6/12/2014 | DPD | GE |
| 5 | 15-0106 | **-3** MOVED HOLE FOR -97 TO BE DRILLED AT -1, DELETED NOTE 3. | 5/15/2015 | RJC | JAG |

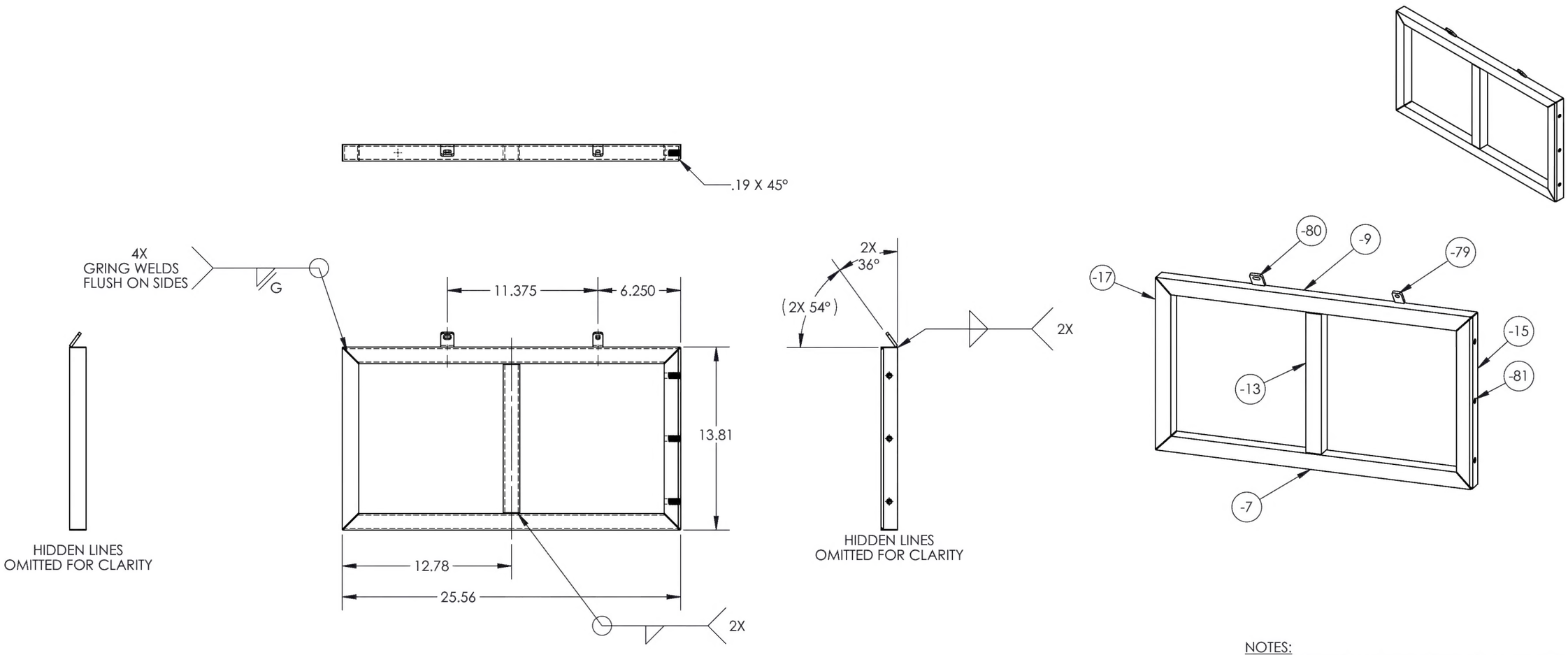


NOTES:
1. ASSEMBLE FRAME THEN INSERT 3X -81 HELICOILS.
2. WELD GAP OF 1/16.

-3

BASE 1 WELDMENT

DART AEROSPACE

| | | | |
|---|---|---|---|
| TITLE | UPPER DECK PLATFORM | | |
| DWG NO. | RBW1205G00831-3G-3 | REV | 5 |
| MAT'L | | DRAWN BY: | GILBERT |
| UNLESS OTHERWISE SPECIFIED DIMENSIONS ARE IN INCHES<br>.XXX ± .010 FRACTIONS ± 1/8<br>.XX ± .03 ANGLES ±.5°<br>.X ± .1 | | APPROVED | D Weil |
| | | HEAT TREAT | |
| | | FINISH | POWDER COAT YELLOW |
| 1. BREAK ALL SHARP EDGES .015 x 45° OR .015R | | SPEC | FED #13538 |
| 2. DIMENSIONAL LIMITS APPLY AFTER PLATING | | USED ON MODEL | AW139 |
| SCALE 1:8 | DATE 3/17/2011 | SHEET 4 OF 32 | |

This drawing, specifications, and concepts contained here in are the sole property of Dart Aerospace, and may not be reproduced or used in any fashion without the prior written permission of Dart Aerospace Eugene, OR.

REVISIONS

| REV | ECR | DESCRIPTION | DATE | INITIAL | APPROVED |
|---|---|---|---|---|---|
| 1 | | DELETED ONE -79 AND ADDED ONE -80 IN -5 WELDMENT PER S.E. | 2/21/2012 | RJC | SE |
| 2 | | **-5** DELETED 4X -83 RIVNUTS ADDED 2X -84 STIFFENER BLOCK, ADDED 4X M6X1.0 - 6H ↧1.0 | 8/26/2013 | CFS | DW |
| 3 | | **-5** DELETED -84 STIFFENERS, ADDED .19X45° CHAMFER. CH'D CORNER WELDS TO GRIND FLUSH. -79 & -80 CH'D WHERE ANGLE IS MEASURED WAS 54° IS 36°, ADDED 7 8-32 HOLES. | 1/30/2014 | JAG | RW |
| 4 | | **-5** DELETED HOLES FOR MOUNTING -19. | 6/12/2014 | DPD | GE |
| 5 | 15-0106 | **-5** MOVED HOLES FOR -85 TO BE DRILLED AT -1, DELETED NOTE 3. | 5/15/2015 | RJC | JAG |

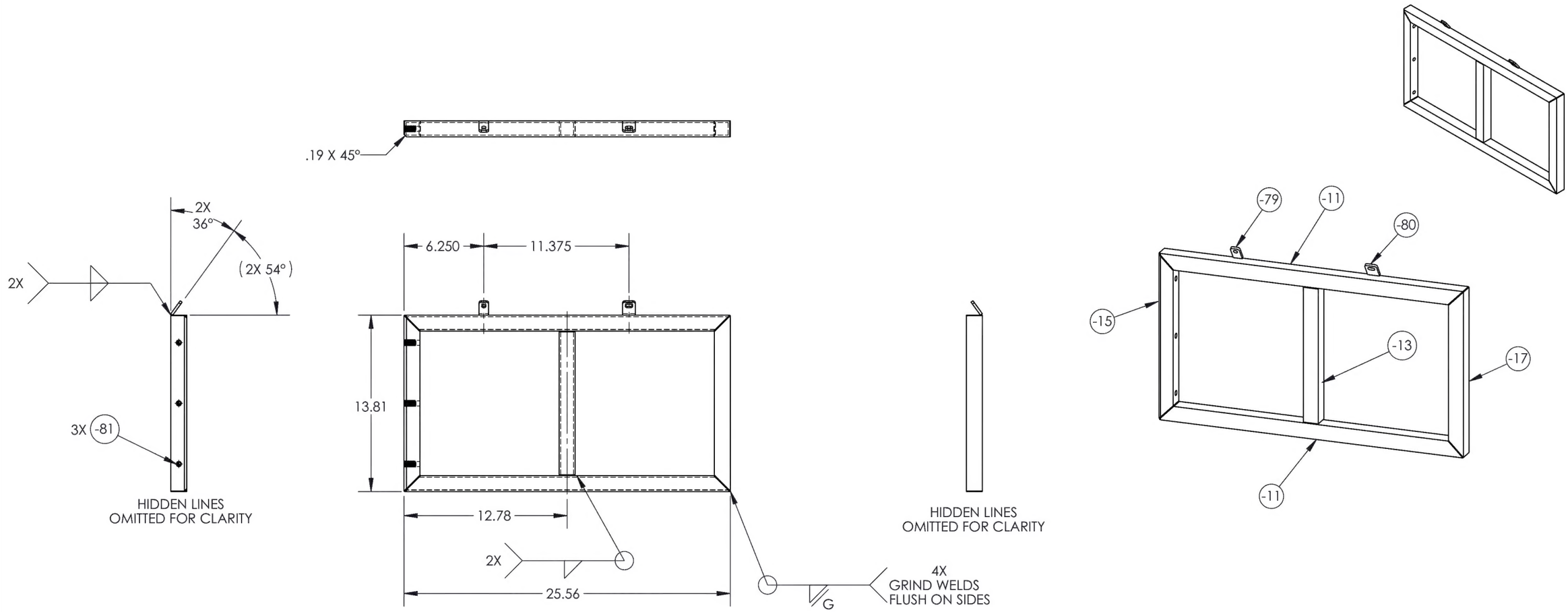


NOTES:
1. ASSEMBLE FRAME THEN INSERT 3X -81 HELICOILs.
2. WELD GAP OF 1/16.

-5

BASE 2 WELDMENT

DART AEROSPACE

| | | | |
|---|---|---|---|
| TITLE | UPPER DECK PLATFORM | | |
| DWG NO. | RBW1205G00831-3G-5 | | REV 5 |
| MAT'L | | DRAWN BY: | GILBERT |
| UNLESS OTHERWISE SPECIFIED DIMENSIONS ARE IN INCHES<br>.XXX ± .010 FRACTIONS ± 1/8<br>.XX ± .03 ANGLES ±.5°<br>.X ± .1 | | APPROVED | D Weil |
| | | HEAT TREAT | |
| | | FINISH | POWDER COAT YELLOW |
| 1. BREAK ALL SHARP EDGES .015 x 45° OR .015R | | SPEC | FED #13538 |
| 2. DIMENSIONAL LIMITS APPLY AFTER PLATING | | USED ON MODEL | AW139 |
| SCALE 1:8 | DATE 3/17/2011 | SHEET 5 OF 32 | |

This drawing, specifications, and concepts contained here in are the sole property of Dart Aerospace, and may not be reproduced or used in any fashion without the prior written permission of Dart Aerospace Eugene, OR.

REVISIONS

| REV | ECR | DESCRIPTION | DATE | INITIAL | APPROVED |
|---|---|---|---|---|---|
| 1 | | CHANGED TABLE COLUMN FROM DIMC TO NOTE, CHANGED -9 FROM Ø.395 TO THRU TUBE & -11 FROM 2X Ø.375 TO THRU WALL. | 2/21/2012 | RJC | SE |
| 5 | 15-0106 | CH'D DWG TO SHEET METAL TOLERANCE. **-7**, **-9**, **-11** CH'D DIM WAS 25.474 IS 25.474 ±.03. **-13** CH'D DIM WAS 11.188 IS 11.188 ±.03. DELETED HOLE TABLE, ALL HOLES ARE DRILLED AT -1 ASSEMBLY. DELETED NOTE. | 5/15/2015 | RJC | JAG |

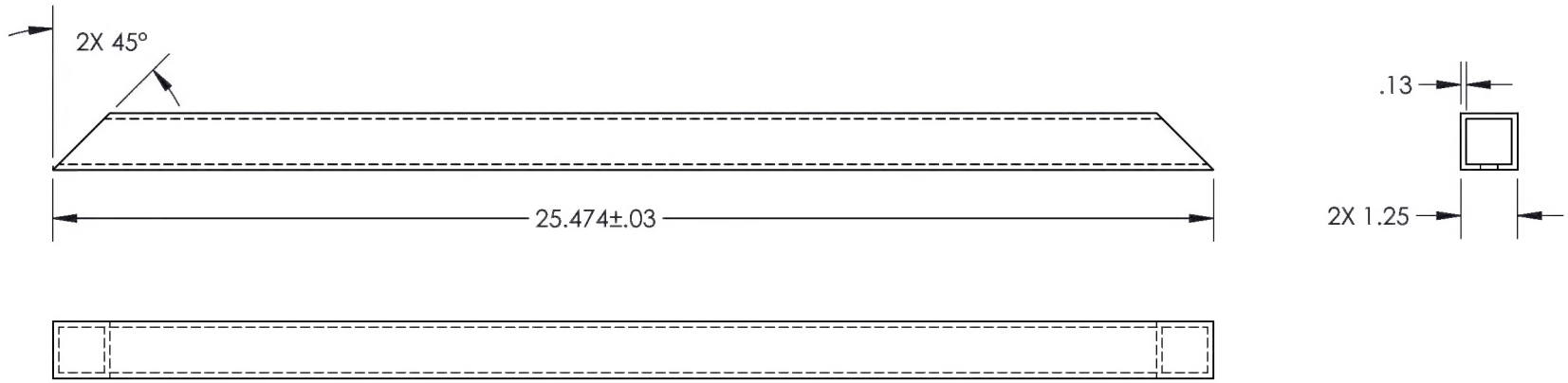


-7 -9 -11

B-1 B-2 B-6

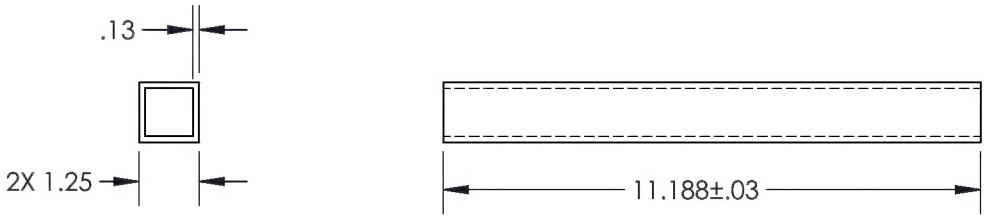


-13

B-5

DART AEROSPACE

TITLE: UPPER DECK PLATFORM

DWG NO. RBW1205G00831-3G-13 REV 5

MAT'L 6061 ARCH. TUBE

DRAWN BY: GILBERT

APPROVED: D Weil

HEAT TREAT

FINISH

SPEC

USED ON MODEL: AW139

UNLESS OTHERWISE SPECIFIED DIMENSIONS ARE IN INCHES

.XXX ± .010
.XX ± .03
.X ± .1

FRACTIONS ± 1/8
ANGLES ±.5°

1. BREAK ALL SHARP EDGES .015 x 45° OR .015R
2. DIMENSIONAL LIMITS APPLY AFTER PLATING

SCALE 1:4 | DATE 6/8/2011 | SHEET 6 OF 32

This drawing, specifications, and concepts contained here in are the sole property of Dart Aerospace, and may not be reproduced or used in any fashion without the prior written permission of Dart Aerospace Eugene, OR.

REVISIONS

| REV | ECR | DESCRIPTION | DATE | INITIAL | APPROVED |
|---|---|---|---|---|---|
| 1 | | ADDED -17 MISSING 4X .59 DIM. & ADDED DRILL AT ASSEMBLY TO 4X Ø.374 HOLE PER S.E. | 2/21/2012 | RJC | SE |
| 2 | | -17 REMOVED 4X Ø.374 HOLE FOR -83 ADDED 2X Ø.50 THRU ALL FOR -84 PLUG WELD. | 8/26/2013 | CFS | DW |
| 3 | | **-15** CH'D TO SOLID FROM TUBE, AND HOLES TO HELICOIL FROM RIVNUT. **-17** CH'D TO SOLID, REMOVED HOLES. CH'D DWG TO SHEET METAL TOLERANCE. DELETED NOTE. | 1/30/2014 | JAG | RW |

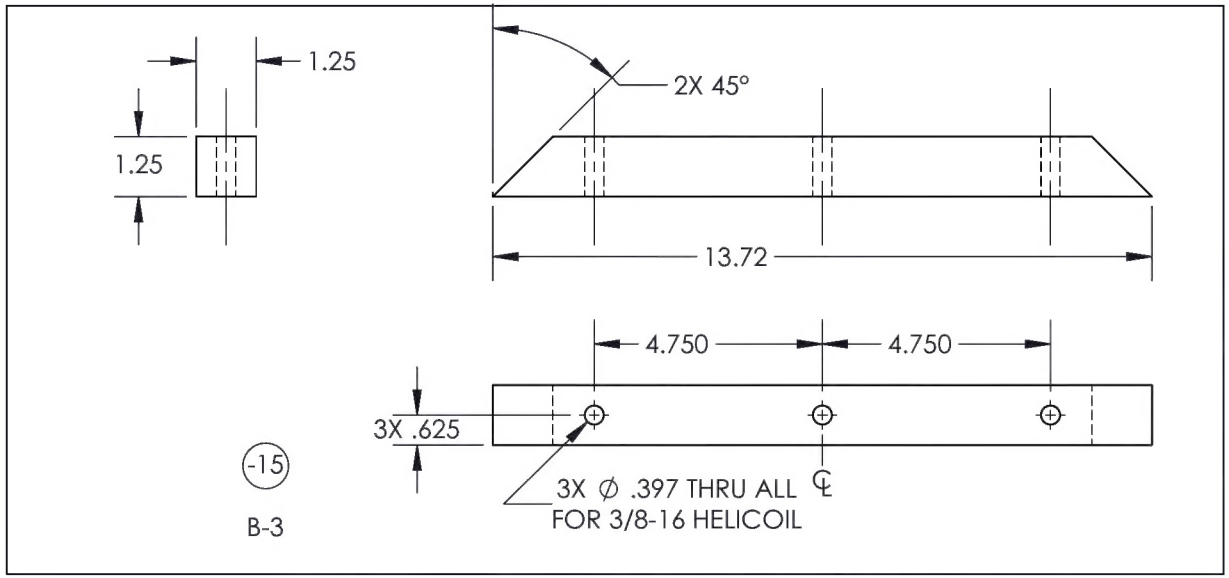


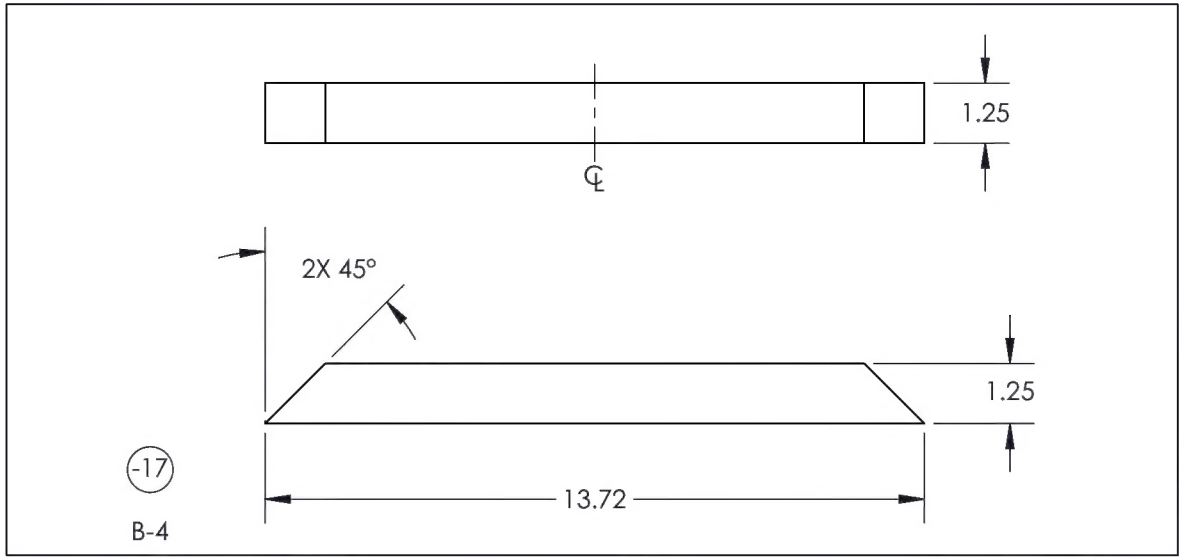


DART AEROSPACE

TITLE
UPPER DECK PLATFORM

DWG NO. RBW1205G00831-3G-15 REV 5

MAT'L 6061

DRAWN BY: GILBERT

APPROVED D Weil

HEAT TREAT

FINISH

SPEC

UNLESS OTHERWISE SPECIFIED DIMENSIONS ARE IN INCHES
.XXX ± .010
.XX ± .03
.X ± .1
FRACTIONS ± 1/8
ANGLES ±.5°

1. BREAK ALL SHARP EDGES .015 x 45° OR .015R
2. DIMENSIONAL LIMITS APPLY AFTER PLATING

USED ON MODEL
AW139

SCALE 1:4 DATE 6/8/2011 SHEET 7 OF 32

This drawing, specifications, and concepts contained here in are the sole property of Dart Aerospace, and may not be reproduced or used in any fashion without the prior written permission of Dart Aerospace Eugene, OR.

REVISIONS

| REV | ECR | DESCRIPTION | DATE | INITIAL | APPROVED |
|---|---|---|---|---|---|
| 3 | | **-19** ADDED DIM 8X R.25, CH'D 6 HOLES FROM Ø.16 TO Ø.18 ⌵ Ø.40 X 82°. | 1/30/2014 | JAG | RW |
| 4 | | **-19** DELETED HOLES, DELETED NOTE 1, CH'D DWG TO SHEET METAL TOLERANCE. | 6/12/2014 | DPD | GE |

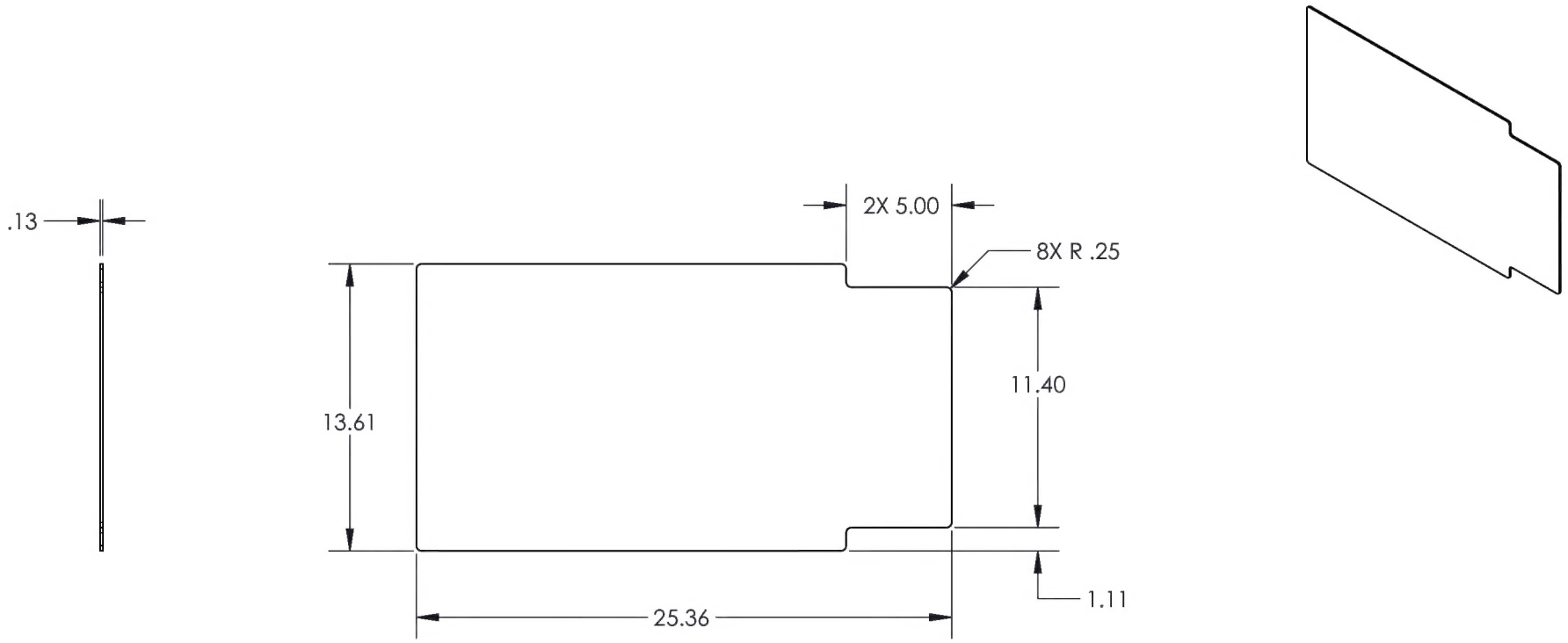


NOTES:
2. ALL HOLES TO BE DRILLED AT -1 BASE ASSEMBLY.

-19

TREAD PLATE

DART AEROSPACE

TITLE
UPPER DECK PLATFORM

DWG NO. RBW1205G00831-3G-19 REV 5

MAT'L ALUMINUM

DRAWN BY: GILBERT

APPROVED D Weil

HEAT TREAT

FINISH

SPEC

USED ON MODEL AW139

UNLESS OTHERWISE SPECIFIED DIMENSIONS ARE IN INCHES
.XXX ± .010
.XX ± .03
.X ± .1
FRACTIONS ± 1/8
ANGLES ±.5°

1. BREAK ALL SHARP EDGES .015 x 45° OR .015R
2. DIMENSIONAL LIMITS APPLY AFTER PLATING

SCALE 1:8 DATE 3/16/2011 SHEET 8 OF 32

This drawing, specifications, and concepts contained here in are the sole property of Dart Aerospace, and may not be reproduced or used in any fashion without the prior written permission of Dart Aerospace Eugene, OR.

REVISIONS

| REV | ECR | DESCRIPTION | DATE | INITIAL | APPROVED |
|---|---|---|---|---|---|
| 1 | | ADDED -21 DRILL AT FINAL ASSEMBLY TO Ø.395 HOLE, ADDED SEE NOTE LEADER, ADDED MISSING .600 DIM. PER S.E. | 2/21/2012 | RJC | SE |
| 3 | | **-21** CH'D DIM WAS 2X R.38 IS 4X R.38. CH'D 2X Ø.266 HOLES TO 2X Ø.266 X .15 SLOT. | 1/30/2014 | JAG | RW |
| 4 | | **-21** CH'D CALLOUT WAS Ø.395 DRILL AT FINAL ASSEMBLY IS Ø.395 DRILL AT -1 BASE ASSEMBLY. | 6/12/2014 | DPD | GE |

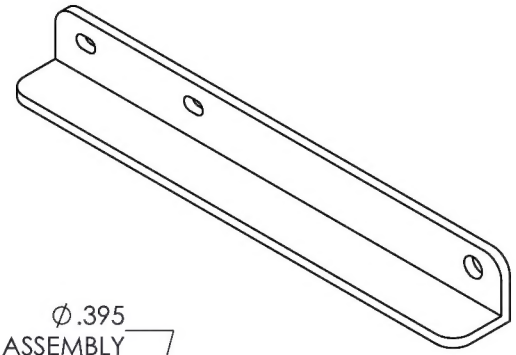

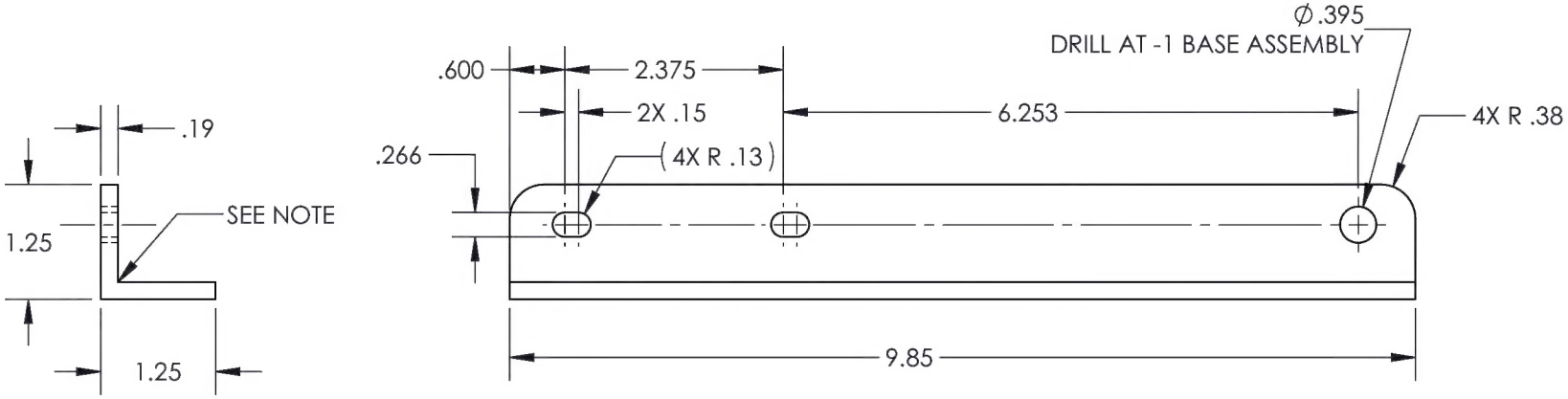


NOTE:
MACHINE RADIUS FROM CORNER.

DART AEROSPACE

TITLE
UPPER DECK PLATFORM

DWG NO. RBW120G00831-3G-21 REV 5

MAT'L S.S.

DRAWN BY: GILBERT

UNLESS OTHERWISE SPECIFIED DIMENSIONS ARE IN INCHES
.XXX ± .005
.XX ± .01
.X ± .1
FRACTIONS ± 1/8
ANGLES ±.5°
1. BREAK ALL SHARP EDGES .015 x 45° OR .015R
2. DIMENSIONAL LIMITS APPLY AFTER PLATING

APPROVED D Weil
HEAT TREAT
FINISH
SPEC
USED ON MODEL AW139

SCALE 1:2 DATE 6/21/2011 SHEET 9 OF 32

-21

LOCKING BRACKET 1

This drawing, specifications, and concepts contained here in are the sole property of Dart Aerospace, and may not be reproduced or used in any fashion without the prior written permission of Dart Aerospace Eugene, OR.

REVISIONS

| REV | ECR | DESCRIPTION | DATE | INITIAL | APPROVED |
|---|---|---|---|---|---|
| 1 | | ADDED -23 SEE NOTE LEADER, ADDED MISSING 2X Ø.266 DIM. PER S.E. | 2/21/2012 | RJC | SE |
| 3 | | **-23** CH'D DIM WAS 2X R.38 IS 4X R.38. | 1/30/2014 | JAG | RW |

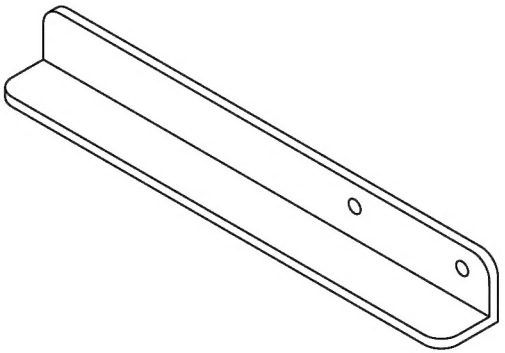

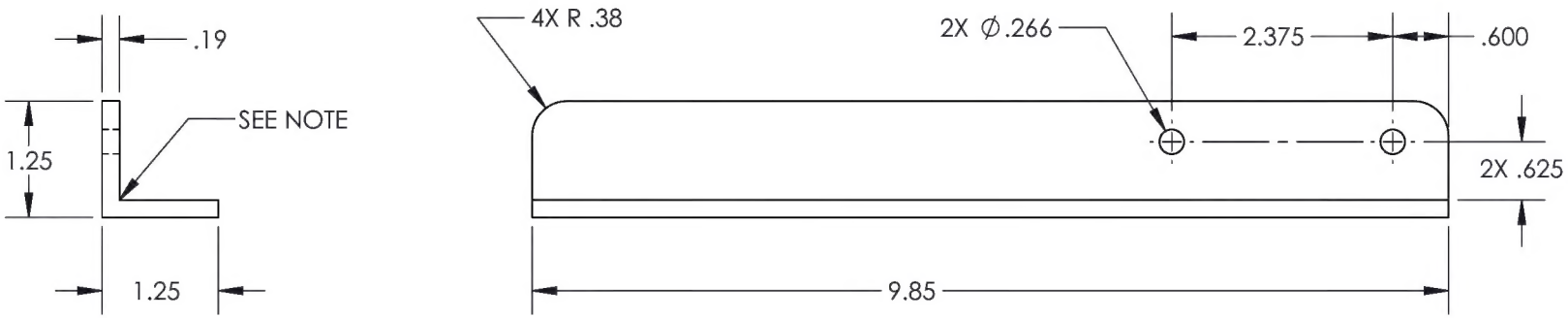


NOTE:
MACHINE RADIUS FROM CORNER.

-23

LOCKING BRACKET 2

DART AEROSPACE

TITLE
UPPER DECK PLATFORM

DWG NO. RBW1205G00831-3G-23 REV 5

MAT'L S.S.

DRAWN BY: GILBERT

APPROVED D Weil

HEAT TREAT

FINISH

SPEC

UNLESS OTHERWISE SPECIFIED DIMENSIONS ARE IN INCHES
.XXX ± .005
.XX ± .01
.X ± .1
FRACTIONS ± 1/32
ANGLES ±.5°

1. BREAK ALL SHARP EDGES .015 x 45° OR .015R
2. DIMENSIONAL LIMITS APPLY AFTER PLATING

USED ON MODEL
AW139

SCALE 1:2 | DATE 6/21/2011 | SHEET 10 OF 32

This drawing, specifications, and concepts contained here in are the sole property of Dart Aerospace, and may not be reproduced or used in any fashion without the prior written permission of Dart Aerospace Eugene, OR.

REVISIONS

| REV | ECR | DESCRIPTION | DATE | INITIAL | APPROVED |
|---|---|---|---|---|---|
| 3 | | **-31** ADDED ALL-AROUND TO WELD CALLOUT. | 1/30/2014 | JAG | RW |

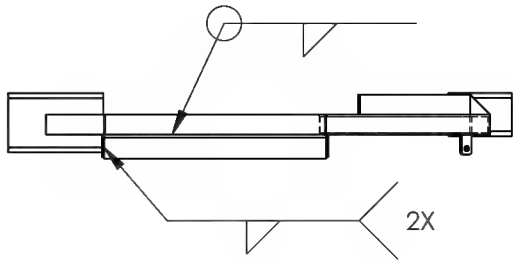


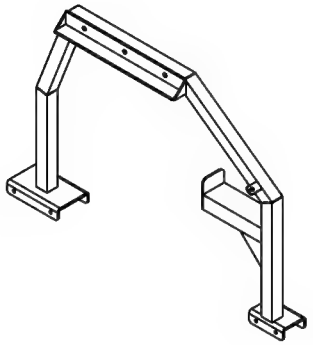

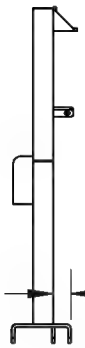


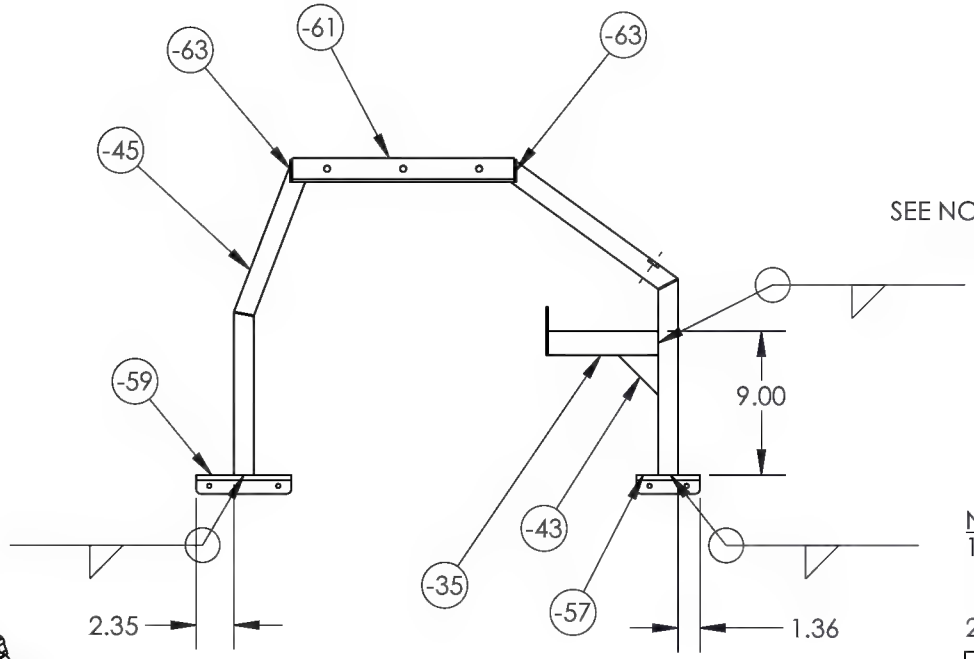


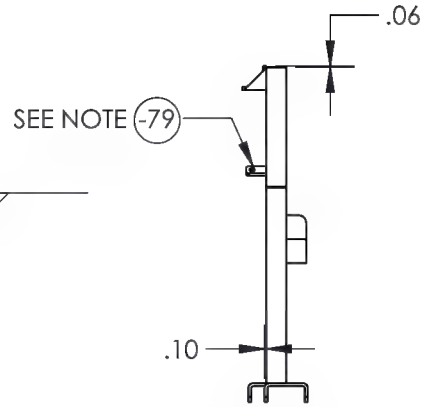


NOTES:

1. WELD -79 (EAR) ONLY AFTER ASSEMBLY TO ENSURE MATING WITH -67 (ROD ASSEMBLY)AS SHOWN IN VIEW B.
2. TOLERANCES ON .XXX AND .XX IS 1/32.

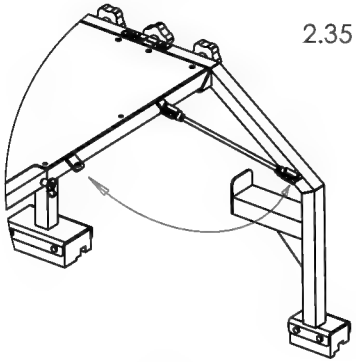

VIEW B

-31

RH LEG WELDMENT

DART AEROSPACE

| | |
|---|---|
| TITLE | UPPER DECK PLATFORM |
| DWG NO. | RBW1205G00831-3G-31 |
| REV | 5 |
| MAT'L | |
| DRAWN BY: | GILBERT |
| APPROVED | D Weil |
| HEAT TREAT | |
| FINISH | POWDER COAT YELLOW |
| SPEC | FED #13538 |
| USED ON MODEL | AW139 |
| SCALE | 1:12 |
| DATE | 3/17/2011 |
| | SHEET 11 OF 32 |

UNLESS OTHERWISE SPECIFIED DIMENSIONS ARE IN INCHES

.XXX ± .005
.XX ± .01
.X ± .1

FRACTIONS ± 1/32
ANGLES ±.5°

1. BREAK ALL SHARP EDGES .015 x 45° OR .015R
2. DIMENSIONAL LIMITS APPLY AFTER PLATING

This drawing, specifications, and concepts contained here in are the sole property of Dart Aerospace, and may not be reproduced or used in any fashion without the prior written permission of Dart Aerospace Eugene, OR.

REVISIONS

| REV | ECR | DESCRIPTION | DATE | INITIAL | APPROVED |
|---|---|---|---|---|---|
| 3 | | **-33** ADDED ALL-AROUND TO WELD CALLOUT. | 1/30/2014 | JAG | RW |

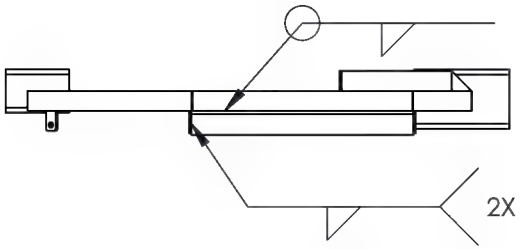


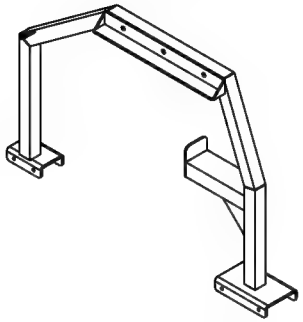

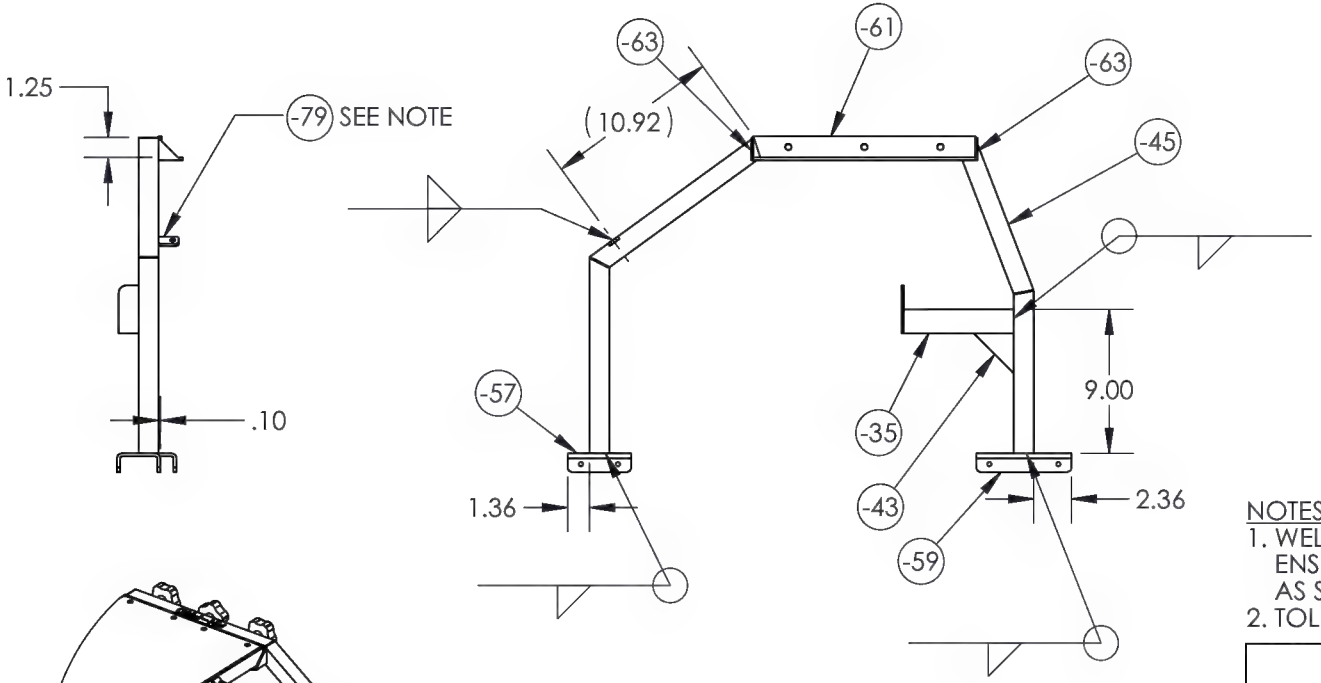


NOTES:
1. WELD -79 (EAR) ONLY AFTER ASSEMBLY TO ENSURE MATING WITH -67 (ROD ASSEMBLY) AS SHOWN IN VIEW B.
2. TOLERANCES ON .XXX AND .XX IS 1/32.

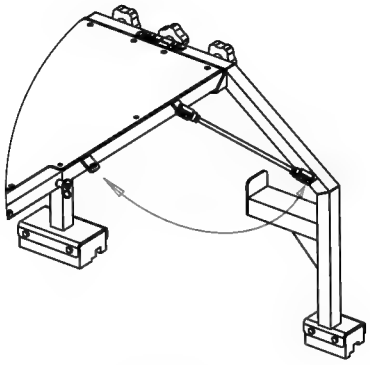

VIEW B

-33

LH LEG WELDMENT

DART AEROSPACE

TITLE: UPPER DECK PLATFORM

DWG NO. RBW1205G00831-3G-33 REV 5

MAT'L

DRAWN BY: GILBERT

APPROVED: D Weil

HEAT TREAT

FINISH: POWDER COAT YELLOW

SPEC: FED #13538

USED ON MODEL: AW139

UNLESS OTHERWISE SPECIFIED DIMENSIONS ARE IN INCHES
.XXX ± .005
.XX ± .01
.X ± .1
FRACTIONS ± 1/32
ANGLES ± .5°

1. BREAK ALL SHARP EDGES .015 x 45° OR .015R
2. DIMENSIONAL LIMITS APPLY AFTER PLATING

SCALE 1:12 | DATE 3/17/2011 | SHEET 12 OF 32

This drawing, specifications, and concepts contained here in are the sole property of Dart Aerospace, and may not be reproduced or used in any fashion without the prior written permission of Dart Aerospace Eugene, OR.

REVISIONS

| REV | ECR | DESCRIPTION | DATE | INITIAL | APPROVED |
|---|---|---|---|---|---|
| 5 | 15-0106 | **-35** CH'D DWG TO SHEET METAL TOLERANCE. DELETED NOTE. | 5/15/2015 | RJC | JAG |

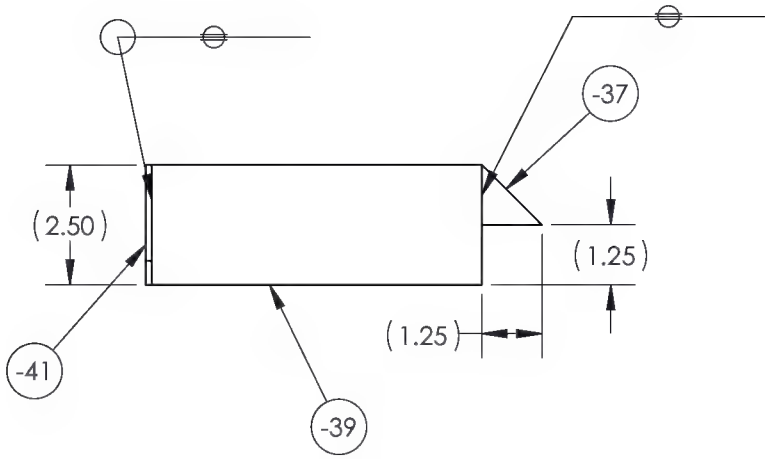


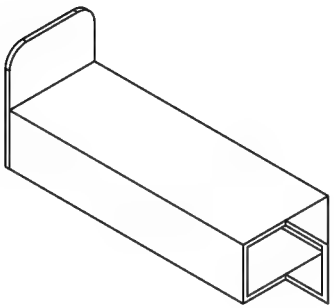

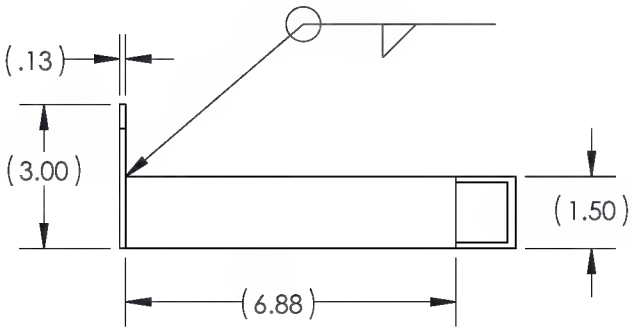


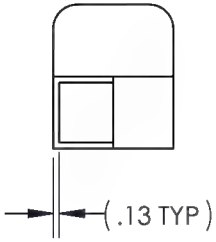


-35

STEP WELDMENT

DART AEROSPACE

TITLE
UPPER DECK PLATFORM

DWG NO. RBW1205G00831-3G-35 REV 5

MAT'L

DRAWN BY: GILBERT

APPROVED D Weil

HEAT TREAT

FINISH

SPEC

UNLESS OTHERWISE SPECIFIED DIMENSIONS ARE IN INCHES
.XXX ± .010
.XX ± .03
.X ± .1
FRACTIONS ± 1/8
ANGLES ± .5°

1. BREAK ALL SHARP EDGES .015 x 45° OR .015R
2. DIMENSIONAL LIMITS APPLY AFTER PLATING

USED ON MODEL
AW139

SCALE 1:4 DATE 3/17/2011 SHEET 13 OF 32

This drawing, specifications, and concepts contained here in are the sole property of Dart Aerospace, and may not be reproduced or used in any fashion without the prior written permission of Dart Aerospace Eugene, OR.

REVISIONS

| REV | ECR | DESCRIPTION | DATE | INITIAL | APPROVED |
|---|---|---|---|---|---|
| 5 | 15-0106 | CH'D DWG TO SHEET METAL TOLERANCE, DELETED NOTE. | 5/15/2015 | RJC | JAG |

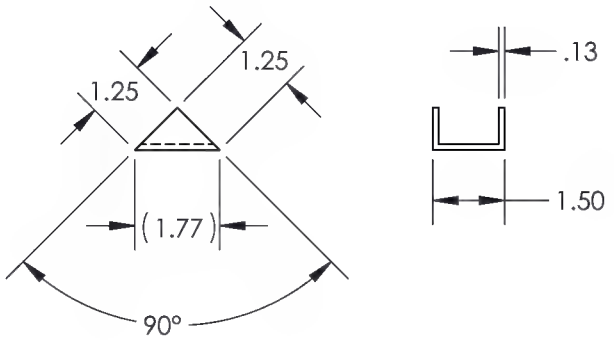


-37

STEP BRACE1

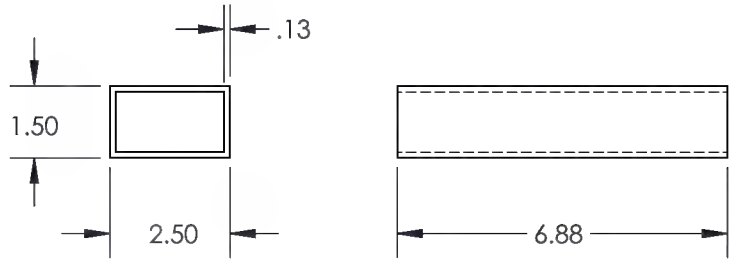


-39

STEP

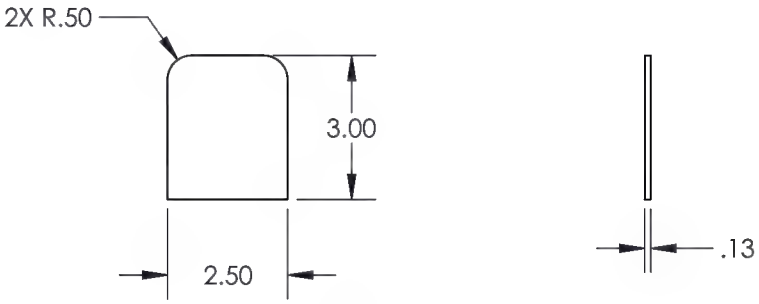


-41

STEP END

DART AEROSPACE

TITLE
UPPER DECK PLATFORM

DWG NO. RBW1205G00831-3G-41 REV 5

MAT'L 6061

DRAWN BY: GILBERT

APPROVED D Weil

HEAT TREAT

FINISH

SPEC

UNLESS OTHERWISE SPECIFIED DIMENSIONS ARE IN INCHES
.XXX ± .010
.XX ± .03
.X ± .1
FRACTIONS ± 1/8
ANGLES ± .5°

1. BREAK ALL SHARP EDGES .015 x 45° OR .015R
2. DIMENSIONAL LIMITS APPLY AFTER PLATING

USED ON MODEL
AW139

SCALE 1:4 | DATE 6/8/2011 | SHEET 14 OF 32

This drawing, specifications, and concepts contained here in are the sole property of Dart Aerospace, and may not be reproduced or used in any fashion without the prior written permission of Dart Aerospace Eugene, OR.

REVISIONS

| REV | ECR | DESCRIPTION | DATE | INITIAL | APPROVED |
|---|---|---|---|---|---|
| 1 | | CH'D -43 MATERIAL FROM 1-1/4 X 2 X 1/8 WALL PER R.W. | 2/21/2012 | RJC | SE |
| 3 | | **-43** ADDED REF. DIMS (3.54) AND (90°). ADDED HIDDEN LINE. | 1/30/2014 | JAG | RW |
| 5 | 15-0106 | **-43** CH'D DWG TO SHEET METAL TOLERANCE, DELETED NOTE. | 5/15/2015 | RJC | JAG |

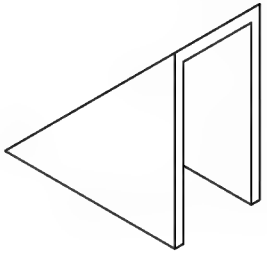

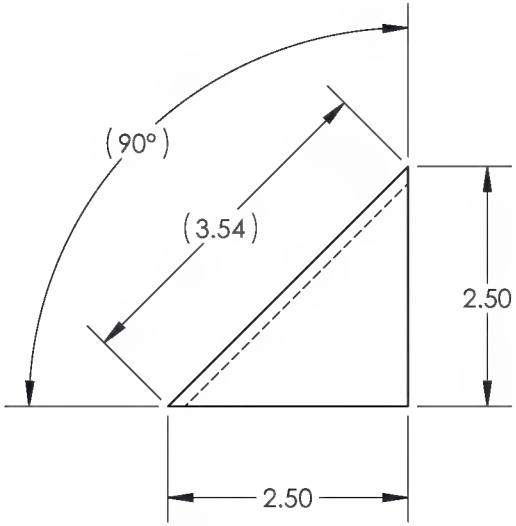


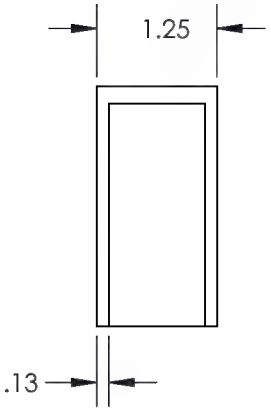


-43

STEP BRACE

DART AEROSPACE

TITLE
UPPER DECK PLATFORM

DWG NO. RBW1205G00831-3G-43 REV 5

MAT'L 6061 ARCH. TUBE

DRAWN BY: GILBERT

APPROVED D Weil

HEAT TREAT

FINISH

SPEC

USED ON MODEL AW139

UNLESS OTHERWISE SPECIFIED DIMENSIONS ARE IN INCHES
.XXX ± .010
.XX ± .03
.X ± .1
FRACTIONS ± 1/8
ANGLES ± .5°

1. BREAK ALL SHARP EDGES .015 x 45° OR .015R
2. DIMENSIONAL LIMITS APPLY AFTER PLATING

SCALE 1:2 | DATE 3/21/2011 | SHEET 15 OF 32

This drawing, specifications, and concepts contained here in are the sole property of Dart Aerospace, and may not be reproduced or used in any fashion without the prior written permission of Dart Aerospace Eugene, OR.

REVISIONS

| REV | ECR | DESCRIPTION | DATE | INITIAL | APPROVED |
|---|---|---|---|---|---|
| 5 | 15-0106 | **-45** CH'D DWG TO SHEET METAL TOLERANCE, DELETED NOTE 2. | 5/15/2015 | RJC | JAG |

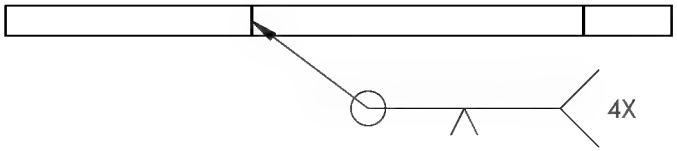


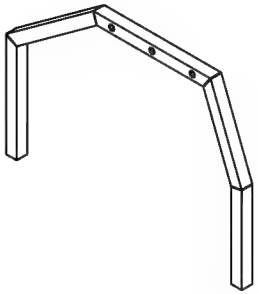

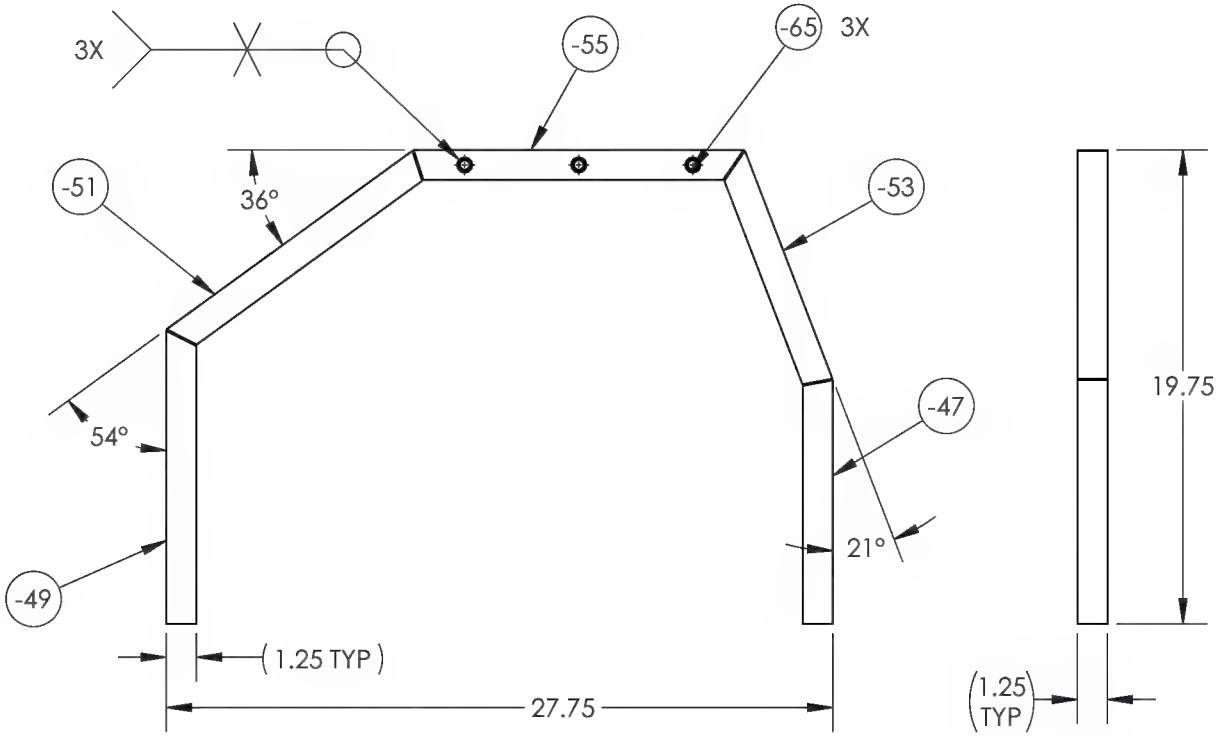


NOTES:
1. WELD GAP OF 1/16.

-45

LEG WELDMENT

DART AEROSPACE

| | | | |
|---|---|---|---|
| TITLE | UPPER DECK PLATFORM | | |
| DWG NO. | RBW1205G00831-3G-45 | REV | 5 |
| MAT'L | | DRAWN BY: | GILBERT |
| UNLESS OTHERWISE SPECIFIED DIMENSIONS ARE IN INCHES<br>.XXX ± .010<br>.XX ± .03<br>.X ± .1<br>FRACTIONS ± 1/8<br>ANGLES ±.5°<br>1. BREAK ALL SHARP EDGES .015 x 45° OR .015R<br>2. DIMENSIONAL LIMITS APPLY AFTER PLATING | | APPROVED | D Weil |
| | | HEAT TREAT | |
| | | FINISH | |
| | | SPEC | |
| | | USED ON MODEL | AW139 |
| SCALE 1:8 | DATE 3/17/2011 | SHEET 16 OF 32 | |

This drawing, specifications, and concepts contained here in are the sole property of Dart Aerospace, and may not be reproduced or used in any fashion without the prior written permission of Dart Aerospace Eugene, OR.

REVISIONS

| REV | ECR | DESCRIPTION | DATE | INITIAL | APPROVED |
|---|---|---|---|---|---|
| 1 | | ADDED -55 THRU BOTH SIDES TO 3X Ø.625 HOLE PER S.E. | 2/21/2012 | RJC | SE |
| 5 | 15-0106 | CH'D DWG TO SHEET METAL TOLERANCE, DELETED NOTE. | 5/15/2015 | RJC | JAG |

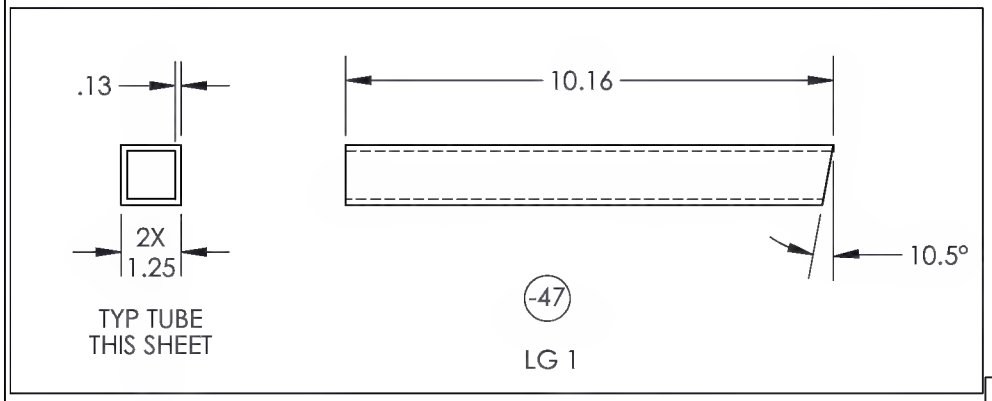


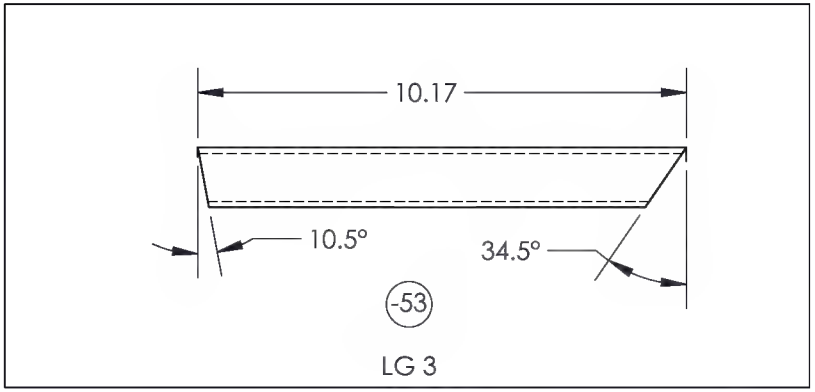


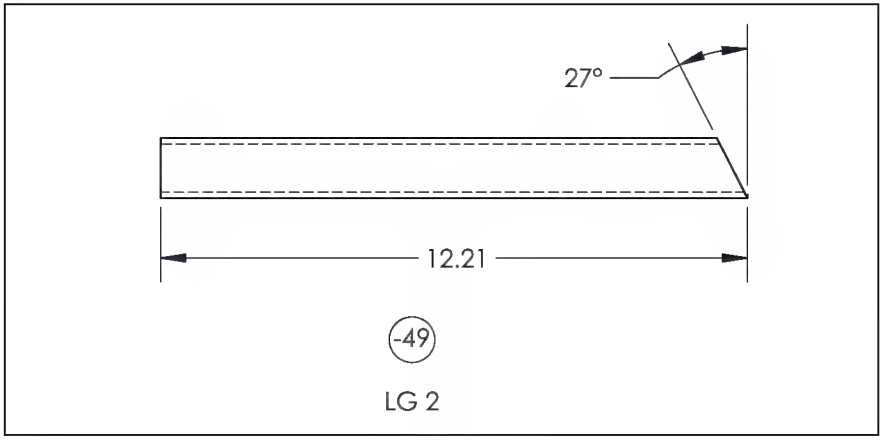


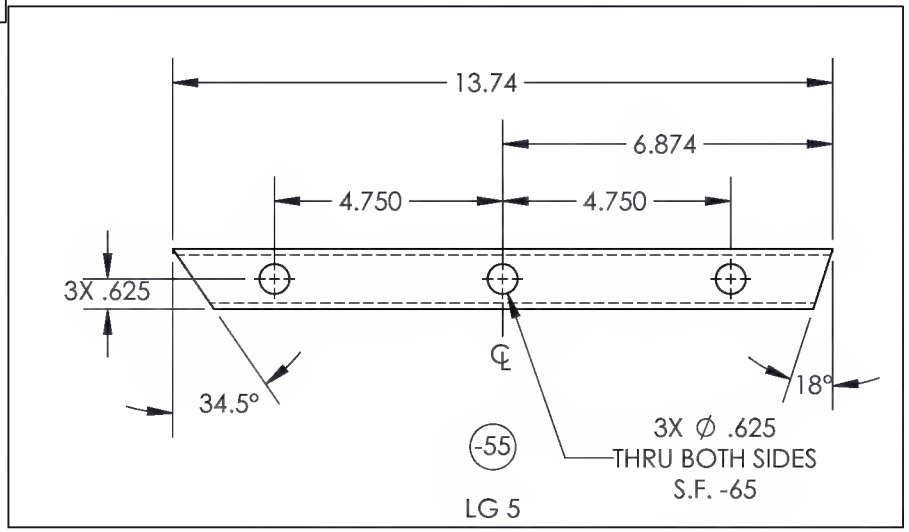


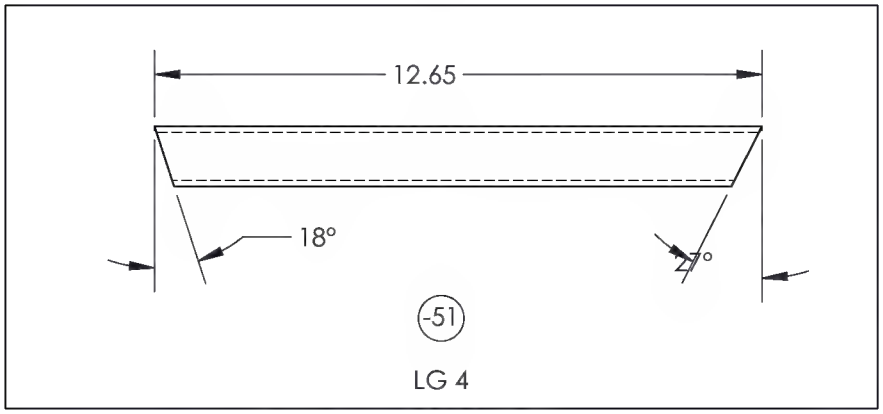


DART AEROSPACE

TITLE: UPPER DECK PLATFORM

DWG NO. RBW1205G00831-3G-47 REV 5

MAT'L 6061 ARCH. TUBE

DRAWN BY: GILBERT

APPROVED: D Weil

HEAT TREAT

FINISH

SPEC

USED ON MODEL: AW139

UNLESS OTHERWISE SPECIFIED DIMENSIONS ARE IN INCHES
.XXX ± .010
.XX ± .03
.X ± .1
FRACTIONS ± 1/8
ANGLES ±.5°

1. BREAK ALL SHARP EDGES .015 x 45° OR .015R
2. DIMENSIONAL LIMITS APPLY AFTER PLATING

SCALE 1:4 | DATE 6/8/2011 | SHEET 17 OF 32

This drawing, specifications, and concepts contained here in are the sole property of Dart Aerospace, and may not be reproduced or used in any fashion without the prior written permission of Dart Aerospace Eugene, OR.

REVISIONS

| REV | ECR | DESCRIPTION | DATE | INITIAL | APPROVED |
|---|---|---|---|---|---|
| 5 | 15-0106 | CH'D DWG TO SHEET METAL TOLERANCE. | 5/15/2015 | RJC | JAG |

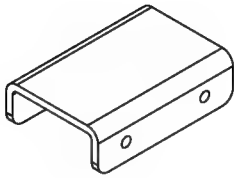

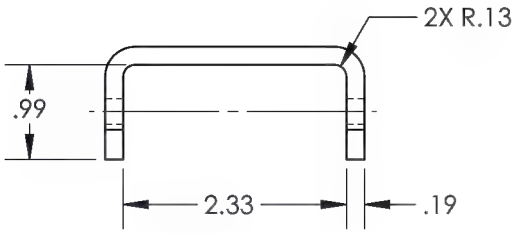


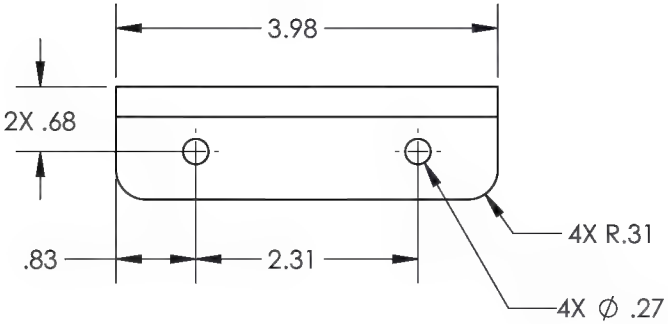


-57

SMALL FOOT BRACKET

DART AEROSPACE

TITLE
UPPER DECK PLATFORM

DWG NO. RBW1205G00831-3G-57 REV 5

MAT'L 6061

DRAWN BY: GILBERT

APPROVED D Weil

HEAT TREAT

FINISH

SPEC

UNLESS OTHERWISE SPECIFIED DIMENSIONS ARE IN INCHES
.XXX ± .010
.XX ± .03
.X ± .1
FRACTIONS ± 1/8
ANGLES ± .5°

1. BREAK ALL SHARP EDGES .015 x 45° OR .015R
2. DIMENSIONAL LIMITS APPLY AFTER PLATING

USED ON MODEL
AW139

SCALE 1:2 DATE 3/16/2011 SHEET 18 OF 32

This drawing, specifications, and concepts contained here in are the sole property of Dart Aerospace, and may not be reproduced or used in any fashion without the prior written permission of Dart Aerospace Eugene, OR.

REVISIONS

| REV | ECR | DESCRIPTION | DATE | INITIAL | APPROVED |
|---|---|---|---|---|---|
| 5 | 15-0106 | CH'D DWG TO SHEET METAL TOLERANCE. | 5/15/2015 | RJC | JAG |

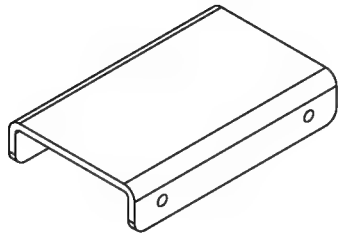

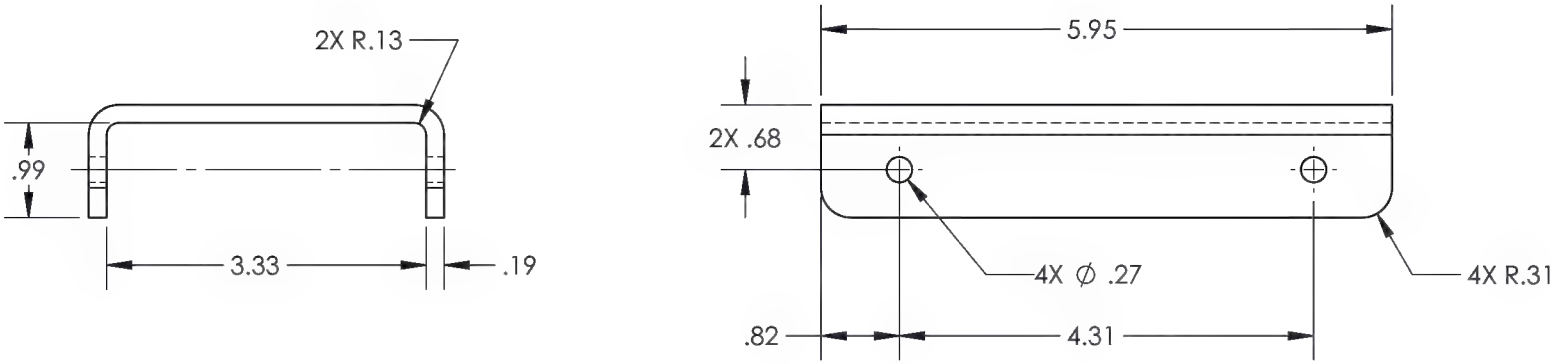


-59

LARGE FOOT BRACKET

DART AEROSPACE

TITLE
UPPER DECK PLATFORM

DWG NO. RBW1205G00831-3G-59 REV 5

MAT'L 6061

DRAWN BY: GILBERT

APPROVED D Weil

HEAT TREAT

FINISH

SPEC

UNLESS OTHERWISE SPECIFIED DIMENSIONS ARE IN INCHES
.XXX ± .010
.XX ± .03
.X ± .1
FRACTIONS ± 1/8
ANGLES ±.5°

1. BREAK ALL SHARP EDGES .015 x 45° OR .015R
2. DIMENSIONAL LIMITS APPLY AFTER PLATING

USED ON MODEL
AW139

SCALE 1:2 DATE 3/16/2011 SHEET 19 OF 32

This drawing, specifications, and concepts contained here in are the sole property of Dart Aerospace, and may not be reproduced or used in any fashion without the prior written permission of Dart Aerospace Eugene, OR.

REVISIONS

| REV | ECR | DESCRIPTION | DATE | INITIAL | APPROVED |
|---|---|---|---|---|---|
| 3 | | **-61** ADDED NOTE "CLEAN-UP INSIDE RADIUS" | 1/30/2014` | JAG | RW |
| 5 | 15-0106 | **-61** CH'D DIM WAS 3X .81 IS 3X .84, CH'D DWG TO SHEET METAL TOLERANCE. | 5/15/2015 | RJC | JAG |

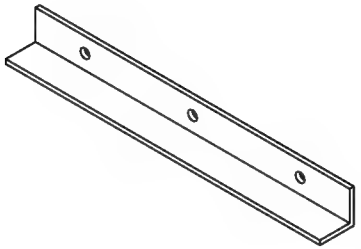

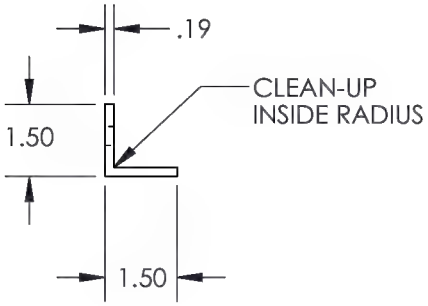


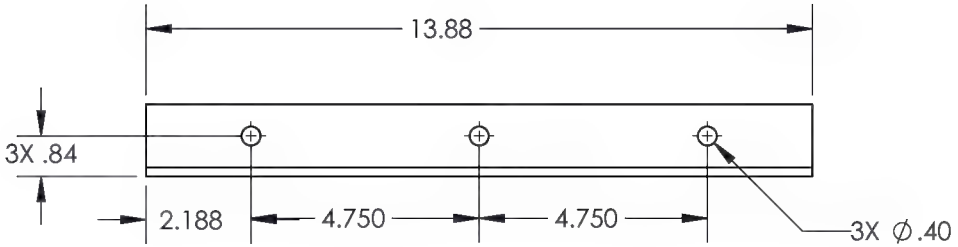


-61

BASE SHELF

DART AEROSPACE

TITLE
UPPER DECK PLATFORM

DWG NO. RBW1205G00831-3G-61 REV 5

MAT'L 6061 ARCH. ANGLE

DRAWN BY: GILBERT

APPROVED D Weil

HEAT TREAT

FINISH

SPEC

UNLESS OTHERWISE SPECIFIED DIMENSIONS ARE IN INCHES
.XXX ± .010
.XX ± .03
.X ± .1
FRACTIONS ± 1/8
ANGLES ± .5°

1. BREAK ALL SHARP EDGES .015 x 45° OR .015R
2. DIMENSIONAL LIMITS APPLY AFTER PLATING

USED ON MODEL
AW139

SCALE 1:4 DATE 3/17/2011 SHEET 20 OF 32

This drawing, specifications, and concepts contained here in are the sole property of Dart Aerospace, and may not be reproduced or used in any fashion without the prior written permission of Dart Aerospace Eugene, OR.

REVISIONS

| REV | ECR | DESCRIPTION | DATE | INITIAL | APPROVED |
|---|---|---|---|---|---|
| 5 | 15-0106 | **-63** CH'D DWG TO SHEET METAL TOLERANCE, DELETED NOTE. | 5/15/2015 | RJC | JAG |

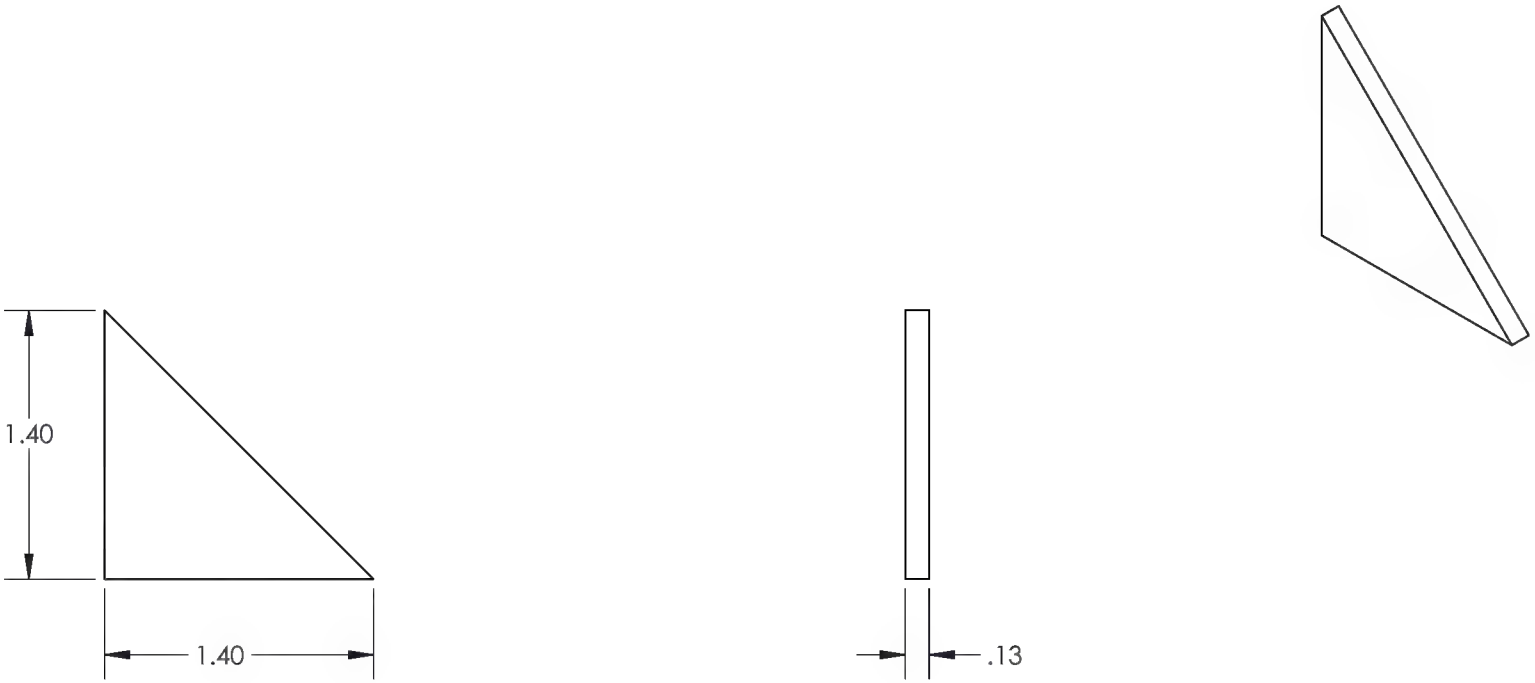


-63

BASE SHELF GUSSET

DART AEROSPACE

TITLE
UPPER DECK PLATFORM

DWG NO. RBW1205G00831-3G-63 REV 5

MAT'L 6061

DRAWN BY: GILBERT

APPROVED D Weil

HEAT TREAT

FINISH

SPEC

USED ON MODEL AW139

UNLESS OTHERWISE SPECIFIED DIMENSIONS ARE IN INCHES
.XXX ± .010
.XX ± .03
.X ± .1
FRACTIONS ± 1/8
ANGLES ± .5°

1. BREAK ALL SHARP EDGES .015 x 45° OR .015R
2. DIMENSIONAL LIMITS APPLY AFTER PLATING

SCALE 1:1 DATE 3/17/2011 SHEET 21 OF 32

This drawing, specifications, and concepts contained here in are the sole property of Dart Aerospace, and may not be reproduced or used in any fashion without the prior written permission of Dart Aerospace Eugene, OR.

REVISIONS

| REV | ECR | DESCRIPTION | DATE | INITIAL | APPROVED |
|---|---|---|---|---|---|
| 1 | | ADDED -65 2X .07 X 45° WELD CHAMFERS PER G.E. | 5/14/2015 | | |
| 3 | | **-65** ADDED DIM 1.25, DELETED DIM 1.11. | 1/30/2014 | JAG | RW |

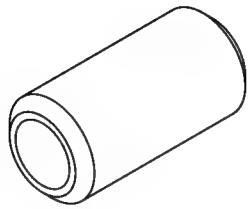

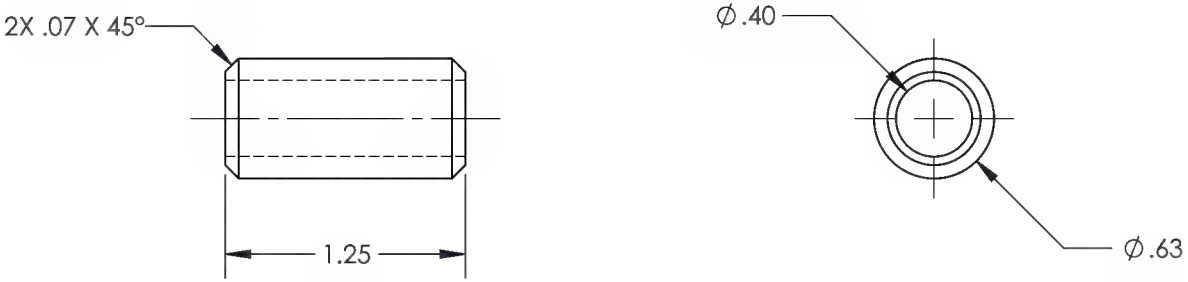


-65

INSERT PIPE

DART AEROSPACE

TITLE
UPPER DECK PLATFORM

DWG NO. RBW1205G00831-3G-65 REV 5

MAT'L ALUMINUM

DRAWN BY: GILBERT

APPROVED D Weil

HEAT TREAT

FINISH

SPEC

USED ON MODEL AW139

UNLESS OTHERWISE SPECIFIED DIMENSIONS ARE IN INCHES
.XXX ± .005
.XX ± .01
.X ± .1
FRACTIONS ± 1/32
ANGLES ±.5°

1. BREAK ALL SHARP EDGES .015 x 45° OR .015R
2. DIMENSIONAL LIMITS APPLY AFTER PLATING

SCALE 1:1 | DATE 3/17/2011 | SHEET 22 OF 32

This drawing, specifications, and concepts contained here in are the sole property of Dart Aerospace, and may not be reproduced or used in any fashion without the prior written permission of Dart Aerospace Eugene, OR.

REVISIONS

| REV | ECR | DESCRIPTION | DATE | INITIAL | APPROVED |
|---|---|---|---|---|---|
| 1 | | ADDED -67 NOTE TO LOCTITE AFTER ASSEMBLY AND (11.38) DIM. PER R.W. | 2/21/2012 | RJC | SE |

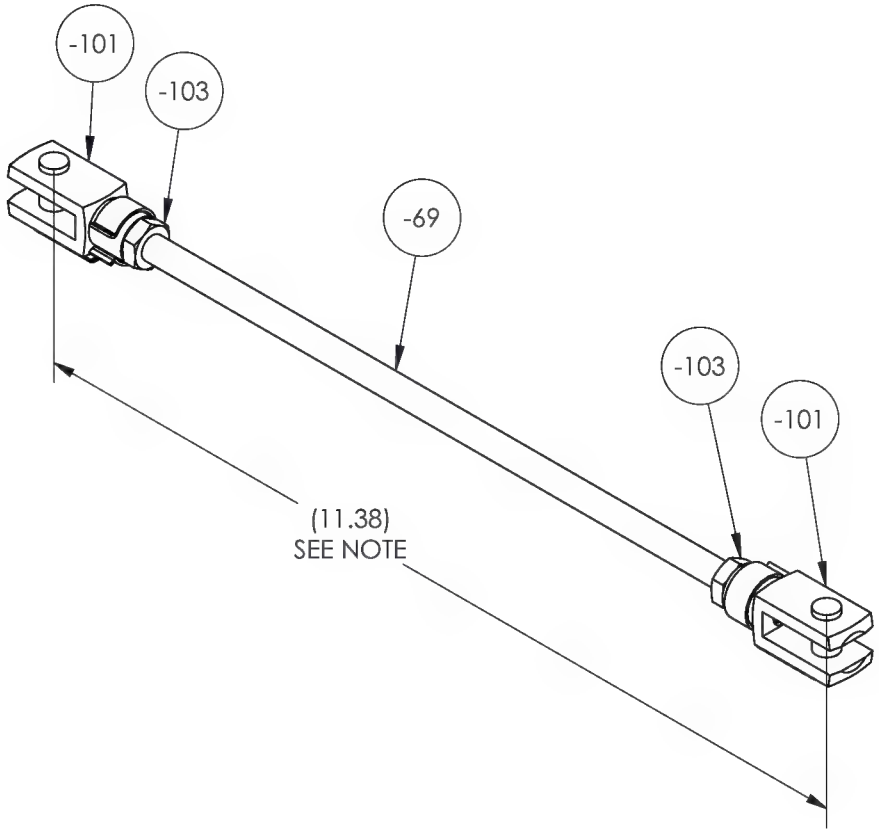


NOTE:
LOCTITE (292) THREADS AFTER ASSEMBLY WITH LEGS IN DOWN POSITION.

-67

ROD ASSEMBLY

DART AEROSPACE

TITLE
UPPER DECK PLATFORM

DWG NO. RBW1205G00831-3G-67 REV 5

MAT'L

DRAWN BY: GILBERT

APPROVED D Weil

HEAT TREAT

FINISH

SPEC

USED ON MODEL
AW139

UNLESS OTHERWISE SPECIFIED DIMENSIONS ARE IN INCHES
.XXX ± .005
.XX ± .01
.X ± .1
FRACTIONS ± 1/32
ANGLES ±.5°

1. BREAK ALL SHARP EDGES .015 x 45° OR .015R
2. DIMENSIONAL LIMITS APPLY AFTER PLATING

SCALE 1:2 | DATE 3/16/2011 | SHEET 23 OF 32

This drawing, specifications, and concepts contained here in are the sole property of Dart Aerospace, and may not be reproduced or used in any fashion without the prior written permission of Dart Aerospace Eugene, OR.

REVISIONS

| REV | ECR | DESCRIPTION | DATE | INITIAL | APPROVED |
|---|---|---|---|---|---|
| 5 | 15-0106 | **-69** CH'D LENGTH DIM WAS 10.31 IS 9.75. | 5/15/2015 | RJC | JAG |

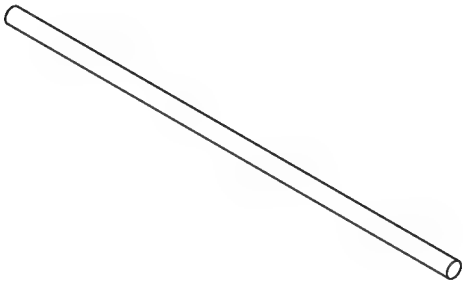

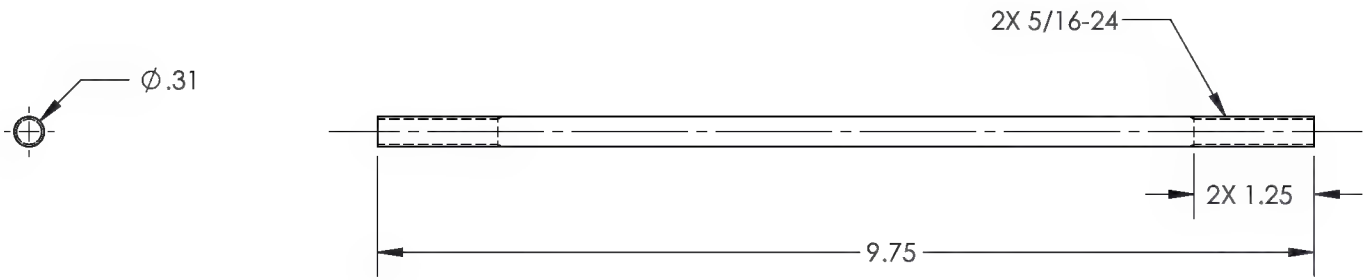


-69

ROD

DART AEROSPACE

TITLE
UPPER DECK PLATFORM

DWG NO. RBW1205G00831-3G-69 REV 5

MAT'L 303 S.S.

DRAWN BY: GILBERT

APPROVED D Weil

HEAT TREAT

FINISH

SPEC

UNLESS OTHERWISE SPECIFIED DIMENSIONS ARE IN INCHES
.XXX ± .005
.XX ± .01
.X ± .1
FRACTIONS ± 1/32
ANGLES ±.5°

1. BREAK ALL SHARP EDGES .015 x 45° OR .015R
2. DIMENSIONAL LIMITS APPLY AFTER PLATING

USED ON MODEL
AW139

SCALE 1:2 | DATE 3/16/2011 | SHEET 24 OF 32

This drawing, specifications, and concepts contained here in are the sole property of Dart Aerospace, and may not be reproduced or used in any fashion without the prior written permission of Dart Aerospace Eugene, OR.

REVISIONS

| REV | ECR | DESCRIPTION | DATE | INITIAL | APPROVED |
|---|---|---|---|---|---|
| 1 | | CH'D 1.53 FROM 1.52, .68 FROM .69, .60 FROM .58, .819 FROM .87, AND 5.98 FROM 6.00 PER S.E. | 2/21/2012 | RJC | SE |
| 3 | | **-71, -73, -75, & -77** ADDED NOTES AND VIEW FOR ORIENTATION OF GLUE SEAMS. | 1/30/2014 | JAG | RW |

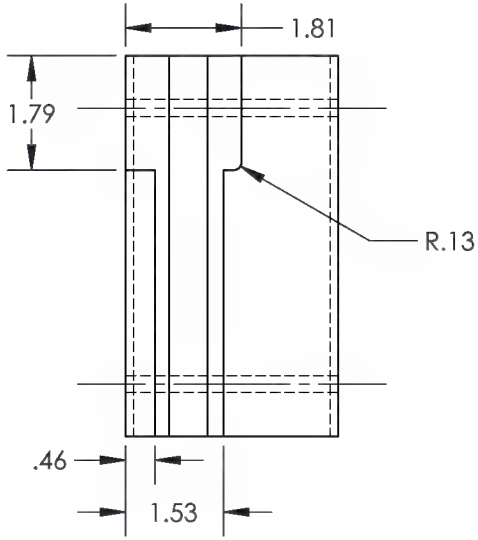


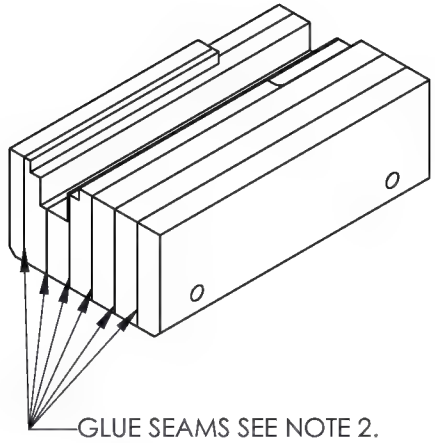


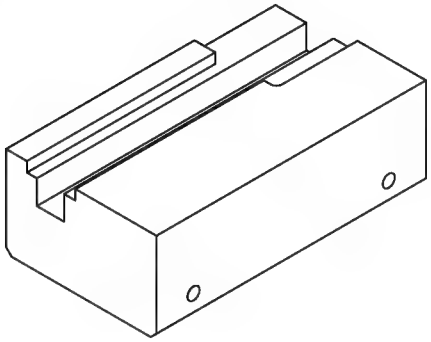

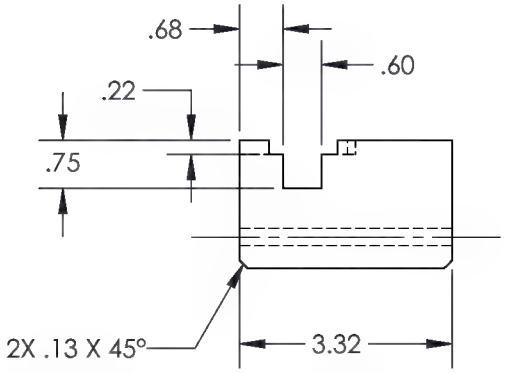


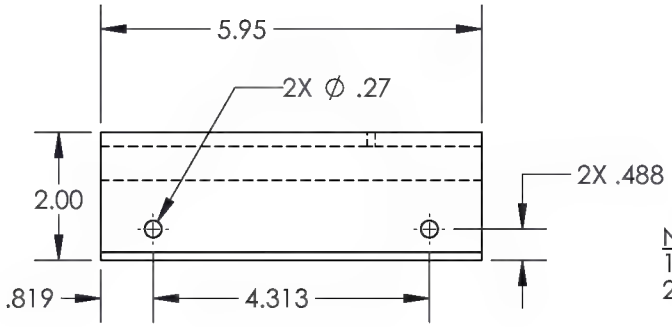


NOTES:
1. 80 DUROMETER
2. IF USING LAMINATED BLANKS TO CUT FROM ORIENTATE SEAMS AS SHOWN.

-71

LH FORWARD PAD

DART AEROSPACE

TITLE: UPPER DECK PLATFORM

DWG NO. RBW1205G00831-3G-71 REV 5

MAT'L RUBBER

DRAWN BY: GILBERT

APPROVED D Weil

HEAT TREAT

FINISH

SPEC

UNLESS OTHERWISE SPECIFIED DIMENSIONS ARE IN INCHES
.XXX ± .005
.XX ± .01
.X ± .1
FRACTIONS ± 1/32
ANGLES ±.5°
1. BREAK ALL SHARP EDGES .015 x 45° OR .015R
2. DIMENSIONAL LIMITS APPLY AFTER PLATING

USED ON MODEL: AW139

SCALE 1:3 | DATE 3/17/2011 | SHEET 25 OF 32

This drawing, specifications, and concepts contained here in are the sole property of Dart Aerospace, and may not be reproduced or used in any fashion without the prior written permission of Dart Aerospace Eugene, OR.

REVISIONS

| REV | ECR | DESCRIPTION | DATE | INITIAL | APPROVED |
|---|---|---|---|---|---|
| 1 | | CH'D 1.81 FROM 1.82, .60 FROM .58, .68 FROM .69, 1.53 FROM 1.52, .819 FROM .871, AND 5.95 FROM 6.00 PER S.E. | 2/21/2012 | RJC | SE |
| 3 | | **-71, -73, -75, & -77** ADDED NOTES AND VIEW FOR ORIENTATION OF GLUE SEAMS. | 1/30/2014 | JAG | RW |

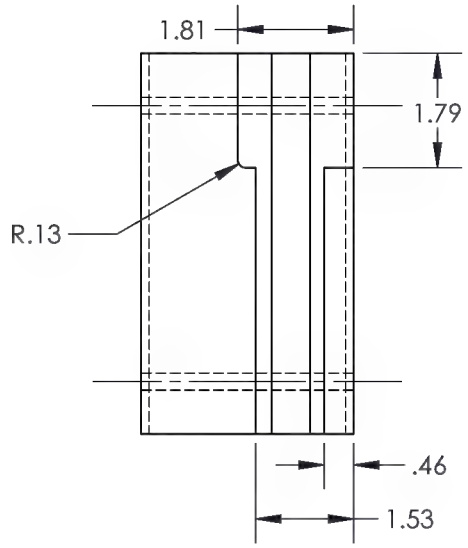


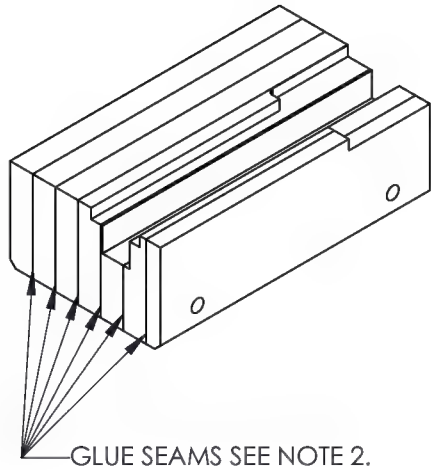


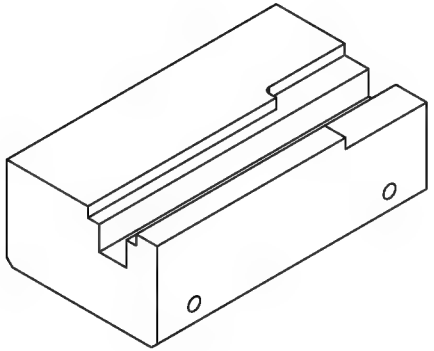

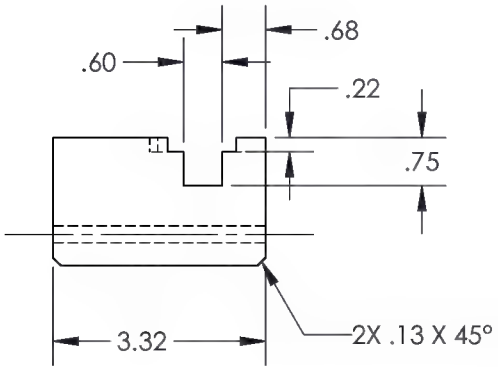


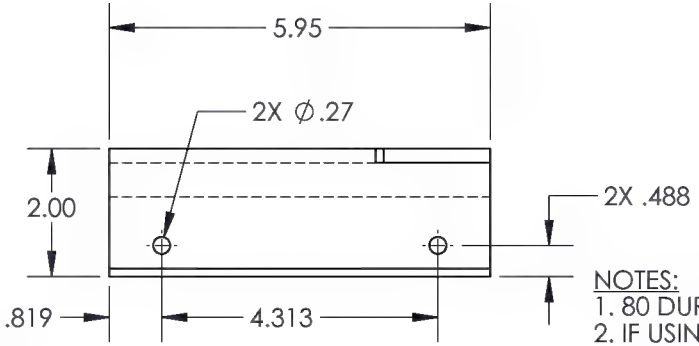


NOTES:
1. 80 DUROMETER
2. IF USING LAMINATED BLANKS TO CUT FROM ORIENTATE SEAMS AS SHOWN.

-73

RH FORWARD PAD

DART AEROSPACE

TITLE: UPPER DECK PLATFORM

DWG NO. RBW1205G00831-3G-73 REV 5

MAT'L RUBBER

DRAWN BY: GILBERT

APPROVED D Weil

HEAT TREAT

FINISH

SPEC

UNLESS OTHERWISE SPECIFIED DIMENSIONS ARE IN INCHES
.XXX ± .005
.XX ± .01
.X ± .1
FRACTIONS ± 1/32
ANGLES ±.5°
1. BREAK ALL SHARP EDGES .015 x 45° OR .015R
2. DIMENSIONAL LIMITS APPLY AFTER PLATING

USED ON MODEL: AW139

SCALE 1:3 | DATE 3/17/2011 | SHEET 26 OF 32

This drawing, specifications, and concepts contained here in are the sole property of Dart Aerospace, and may not be reproduced or used in any fashion without the prior written permission of Dart Aerospace Eugene, OR.

REVISIONS

| REV | ECR | DESCRIPTION | DATE | INITIAL | APPROVED |
|---|---|---|---|---|---|
| 1 | | CH'D 3.98 FROM 3.95, .834 FROM .81, ADDED Ø.27 AND .13 X 45 DIMENSIONS PER S.E. | 2/21/2012 | RJC | SE |
| 3 | | **-71, -73, -75, & -77** ADDED NOTES AND VIEW FOR ORIENTATION OF GLUE SEAMS. | 1/30/2014 | JAG | RW |

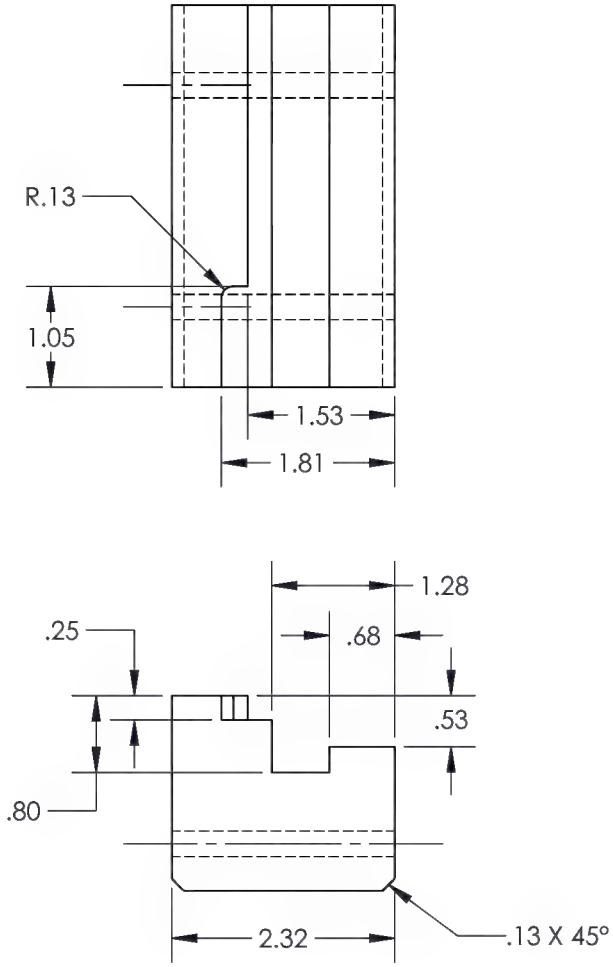


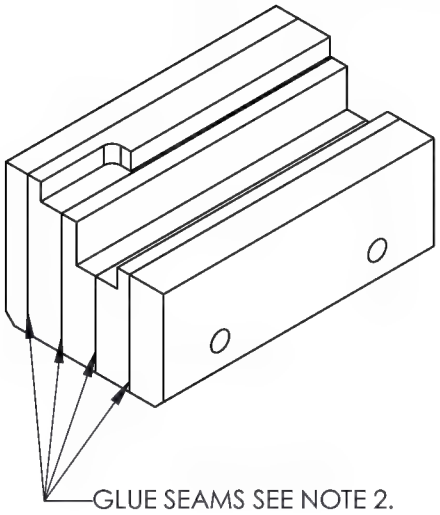


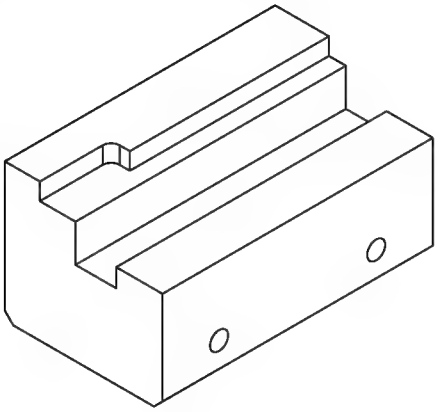

NOTES:
1. 80 DUROMETER
2. IF USING LAMINATED BLANKS TO CUT FROM ORIENTATE SEAMS AS SHOWN.

-75

LH AFT PAD

DART AEROSPACE

TITLE: UPPER DECK PLATFORM

DWG NO. RBW1205G00831-3G-75 REV 5

MAT'L RUBBER

DRAWN BY: GILBERT

APPROVED D Weil

HEAT TREAT

FINISH

SPEC

UNLESS OTHERWISE SPECIFIED DIMENSIONS ARE IN INCHES
.XXX ± .005
.XX ± .01
.X ± .1
FRACTIONS ± 1/32
ANGLES ±.5°

1. BREAK ALL SHARP EDGES .015 x 45° OR .015R
2. DIMENSIONAL LIMITS APPLY AFTER PLATING

USED ON MODEL: AW139

SCALE 1:2 | DATE 3/17/2011 | SHEET 27 OF 32

This drawing, specifications, and concepts contained here in are the sole property of Dart Aerospace, and may not be reproduced or used in any fashion without the prior written permission of Dart Aerospace Eugene, OR.

REVISIONS

| REV | ECR | DESCRIPTION | DATE | INITIAL | APPROVED |
|---|---|---|---|---|---|
| 1 | | CH'D 3.98 FROM 3.95, AND .834 FROM .81 PER S.E. | 2/21/2012 | RJC | SE |
| 3 | | **-71, -73, -75, & -77** ADDED NOTES AND VIEW FOR ORIENTATION OF GLUE SEAMS. | 1/30/2014 | JAG | RW |

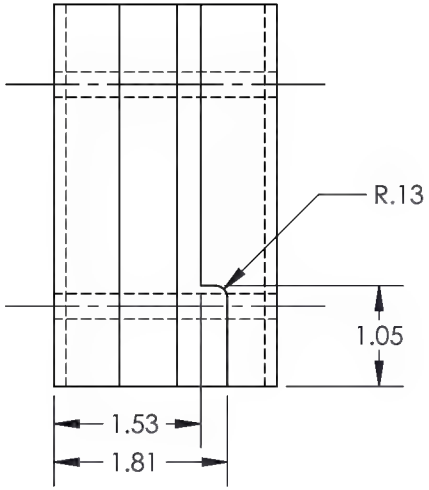


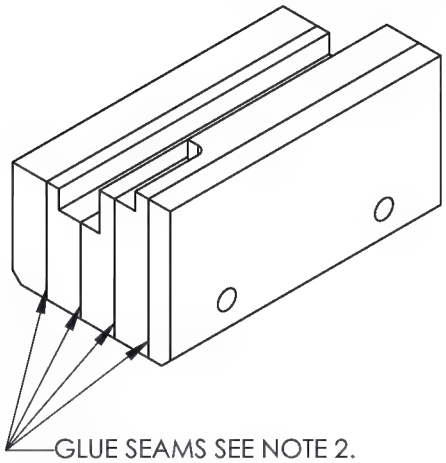


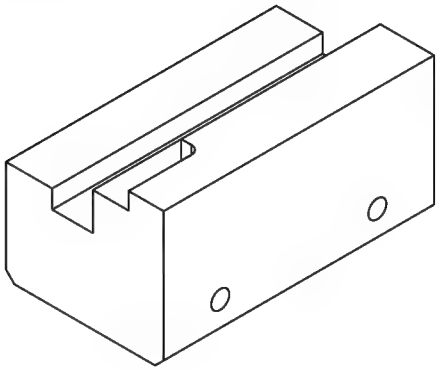

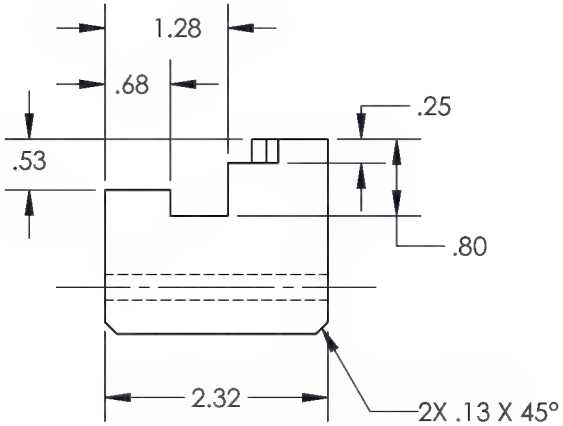


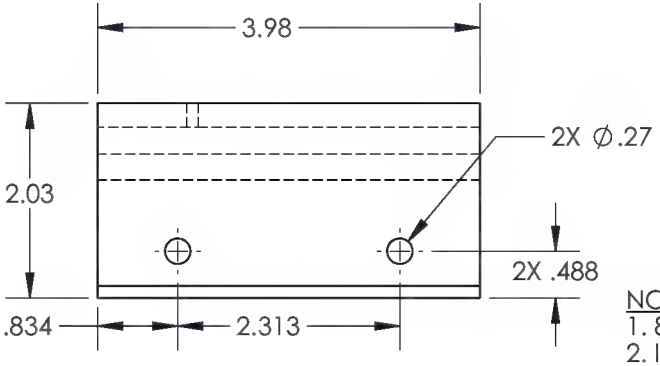


NOTES:
1. 80 DUROMETER
2. IF USING LAMINATED BLANKS TO CUT FROM ORIENTATE SEAMS AS SHOWN.

-77

RH AFT PAD

DART AEROSPACE

TITLE: UPPER DECK PLATFORM

DWG NO. RBW1205G00831-3G-77 REV 5

MAT'L RUBBER

DRAWN BY: GILBERT

APPROVED D Weil

HEAT TREAT

FINISH

SPEC

USED ON MODEL: AW139

UNLESS OTHERWISE SPECIFIED DIMENSIONS ARE IN INCHES
.XXX ± .005
.XX ± .01
.X ± .1
FRACTIONS ± 1/32
ANGLES ±.5°

1. BREAK ALL SHARP EDGES .015 x 45° OR .015R
2. DIMENSIONAL LIMITS APPLY AFTER PLATING

SCALE 1:2 | DATE 3/17/2011 | SHEET 28 OF 32

This drawing, specifications, and concepts contained here in are the sole property of Dart Aerospace, and may not be reproduced or used in any fashion without the prior written permission of Dart Aerospace Eugene, OR.

REVISIONS

| REV | ECR | DESCRIPTION | DATE | INITIAL | APPROVED |
|---|---|---|---|---|---|
| 5 | 15-0106 | **-79** CH'D DWG TO SHEET METAL TOLERANCE, DELETED NOTE. | 5/15/2015 | RJC | JAG |

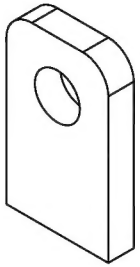

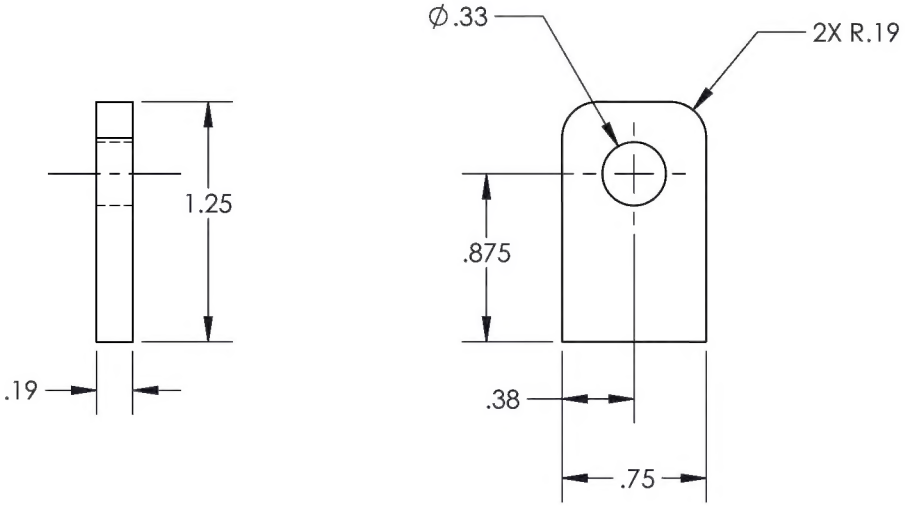


-79

EAR

DART AEROSPACE

TITLE
UPPER DECK PLATFORM

DWG NO. RBW1205G00831-3G-79 REV 5

MAT'L 6061

DRAWN BY: GILBERT

APPROVED D Weil

HEAT TREAT

FINISH

SPEC

USED ON MODEL AW139

UNLESS OTHERWISE SPECIFIED DIMENSIONS ARE IN INCHES
.XXX ± .010
.XX ± .03
.X ± .1
FRACTIONS ± 1/8
ANGLES ±.5°

1. BREAK ALL SHARP EDGES .015 x 45° OR .015R
2. DIMENSIONAL LIMITS APPLY AFTER PLATING

SCALE 1:1 DATE 3/16/2011 SHEET 29 OF 32

This drawing, specifications, and concepts contained here in are the sole property of Dart Aerospace, and may not be reproduced or used in any fashion without the prior written permission of Dart Aerospace Eugene, OR.

REVISIONS

| REV | ECR | DESCRIPTION | DATE | INITIAL | APPROVED |
|---|---|---|---|---|---|
| 1 | | ADDED -80 TO MAKE COLLAPSING PLATFORM EASIER PER S.E.` | 2/21/2012 | RJC | SE |
| 3 | | **-80** ADDED 2X R.17 DIM TO SLOT & 2X R.19. | 1/30/2014 | JAG | RW |
| 5 | 15-0106 | **-80** CH'D DWG TO SHEET METAL TOLERANCE. | 5/15/2015 | RJC | JAG |

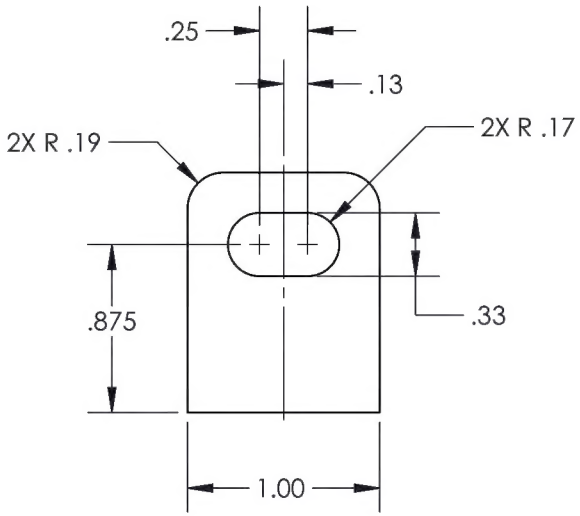


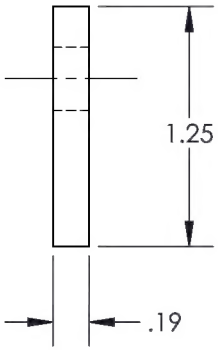


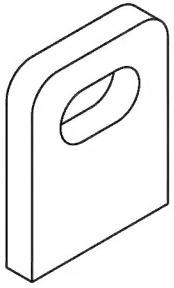

-80

SLOTTED EAR

DART AEROSPACE

TITLE
UPPER DECK PLATFORM

DWG NO. RBW1205G00831-3G-80 REV 5

MAT'L 6061

DRAWN BY: CLOUGH

UNLESS OTHERWISE SPECIFIED DIMENSIONS ARE IN INCHES
.XXX ± .010
.XX ± .03
.X ± .1
FRACTIONS ± 1/8
ANGLES ±.5°

1. BREAK ALL SHARP EDGES .015 x 45° OR .015R
2. DIMENSIONAL LIMITS APPLY AFTER PLATING

APPROVED D Weil
HEAT TREAT
FINISH
SPEC

USED ON MODEL
AW139

SCALE 1:1 | DATE 2/20/2012 | SHEET 30 OF 32

This drawing, specifications, and concepts contained here in are the sole property of Dart Aerospace, and may not be reproduced or used in any fashion without the prior written permission of Dart Aerospace Eugene, OR.

REVISIONS

| REV | ECR | DESCRIPTION | DATE | INITIAL | APPROVED |
|---|---|---|---|---|---|

RH → FWD

FWD ← LH

NOTE:
72 POINT ARIAL FONT

-111

LETTERING

DART AEROSPACE

| | |
|---|---|
| TITLE | UPPER DECK PLATFORM |
| DWG NO. | RBW1205G00831-111 |
| REV | 5 |
| MAT'L | VINYL |
| DRAWN BY: | GILBERT |
| APPROVED | D Weil |
| HEAT TREAT | |
| FINISH | |
| SPEC | |
| USED ON MODEL | AW139 |
| SCALE | 1:1 |
| DATE | 3/21/2011 |
| | SHEET 31 OF 32 |

UNLESS OTHERWISE SPECIFIED DIMENSIONS ARE IN INCHES
.XXX ± .005
.XX ± .01
.X ± .1
FRACTIONS ± 1/32
ANGLES ±.5°

1. BREAK ALL SHARP EDGES .015 x 45° OR .015R
2. DIMENSIONAL LIMITS APPLY AFTER PLATING

This drawing, specifications, and concepts contained here in are the sole property of Dart Aerospace, and may not be reproduced or used in any fashion without the prior written permission of Dart Aerospace Eugene, OR.

REVISIONS

| REV | ECR | DESCRIPTION | DATE | INITIAL | APPROVED |
|---|---|---|---|---|---|

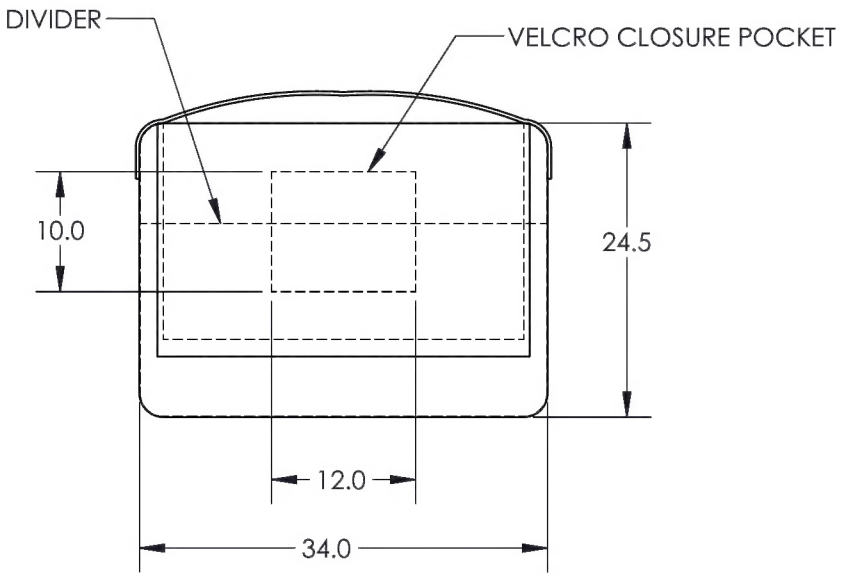


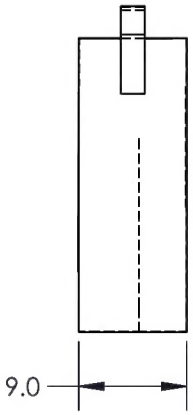


-113

BAG

DART AEROSPACE

TITLE
UPPER DECK PLATFORM

DWG NO. RBW1205G00831-3G-113 REV 5

MAT'L CANVAS

DRAWN BY: GILBERT

APPROVED D Weil

HEAT TREAT

FINISH

SPEC

UNLESS OTHERWISE SPECIFIED DIMENSIONS ARE IN INCHES
.XXX ± .005
.XX ± .01
.X ± .1
FRACTIONS ± 1/32
ANGLES ±.5°

1. BREAK ALL SHARP EDGES .015 x 45° OR .015R
2. DIMENSIONAL LIMITS APPLY AFTER PLATING

USED ON MODEL
AW139

SCALE 1:16 DATE 3/21/2011 SHEET 32 OF 32